Owner's Manual

Original Instructions

Air Conditioners

DC Inverter U-match Series Cassette Type Unit

Models:

Indoor Unit	Outdoor Unit	
CH-IC035RK	CH-IU035RK	CH-IU100RM
CH-IC050RK	CH-IU050RK	CH-IU125RM
CH-IC071RK	CH-IU071RK	CH-IU140RM
CH-IC085RK	CH-IU085RK	CH-IU160RM
CH-IC100RK	CH-IU100RK	
CH-IC125RK	CH-IU125RK	
CH-IC140RK	CH-IU140RK	
CH-IC160RK		

Thank you for choosing air conditioners. Please read this Owner' s Manual carefully before operation and retain it for future reference.

To Users

Thank you for selecting C&H's product. Please read this instruction manual carefully before installing and using the product, so as to master and correctly use the product. In order to guide you to correctly install and use our product and achieve expected operating effect, we hereby instruct as below:

(1) This appliance can be used by children aged from 8 years and above and persons with reduced physical, sensory or mental capabilities or lack of experience and knowledge if they have been given supervision or instruction concerning use of the appliance in a safe way and understand the hazards involved. Children shall not play with the appliance. Cleaning and user maintenance shall not be made by children without supervision.

(2) In order to ensure reliability of product, the product may consume some power under stand-by status for maintaining normal communication of system and preheating refrigerant and lubricant. If the product is not to be used for long, cut off the power supply; please energize and preheat the unit in advance before reusing it.

(3) Please properly select the model according to actual using environment, otherwise it may impact the using convenience.

(4) This product has gone through strict inspection and operational test before leaving the factory. In order to avoid damage due to improper disassembly and inspection, which may impact the normal operation of unit, please do not disassemble the unit by yourself. You can contact with the special maintenance center of our company if necessary.

(5) For personal injury or property loss and damage caused by improper operation such as improper installation and debugging, unnecessary maintenance, violation of related national laws and rules and industrial standard, and violation of this instruction manual, etc., we will bear no liability.

(6) When the product is faulted and cannot be operated, please contact with our maintenance center as soon as possible by providing the following information.

1）Contents of nameplate of product (model, cooling/heating capacity, product No., ex-factory date).

2）Malfunction status (specify the situations before and after the error occurs).

(7) All the illustrations and information in the instruction manual are only for reference. In order to make the product better, we will continuously conduct improvement and innovation. We have the right to make necessary revision to the product from time to time due to the reason of sales or production, and reserve the right to revise the contents without further notice.

(8) Indoor unit must not be installed in a laundry.

(9) If the supply cord is damaged, it must be replaced by the manufacturer, its service agent or similarly qualified persons in order to avoid a hazard.

(10) C&H assumes no responsibility for personal injury, property loss or equipment damage caused by improper installation and commissioning, unnecessary maintenance, or not following relevant national rules and regulations, industrial standards and requirements in this instruction manual.

(11) The final right to interpret for this instruction manual belongs to C&H.

Contents

1 Safety Notices (Please be sure to abide)..... 1
2 Product Introduction..... 5
2.1 Overall Layout.....5
2.2 Product Operating Range 6
2.3 Standard Accessories 6
3 Installation..... 7
3.1 Installation Preparation 7
3.2 Unit Installation.....18
3.3 Electrical Installation 37
3.4 Check after Installation.....50
3.5 Test Running 50
4 Operation Specification..... 51
5 Maintenance 52
5.1 Failures Not Caused by Faults of the AC 52
5.2 Error Code 54
5.3 Unit Maintenance 56
5.4 Notice on Maintenance 59
5.5 After-Sales Services.....66

This marking indicates that this product should not be disposed with other household wastes throughout the EU. To prevent possible harm to the environment or human health from uncontrolled waste disposal, recycle it responsibly to promote the sustainable reuse of material resources. To return your used device, please use the return and collection systems or contact the retailer where the product was purchased. They can take this product for environmental safe recycling.

1 Safety Notices (Please be sure to abide)

SPECIAL WARNING:

(1) Be sure to comply with national gas regulations.

(2) Do not pierce or burn.

(3) Do not use means to accelerate the defrosting process or to clean, other than those recommended by the manufacturer.

(4) Be aware that refrigerants may not contain an odor.

(5) Appliance shall be installed, operated and stored in a room with a floor area larger than"X" m^2（"X" see section 3.1.1）.

(6) The appliance shall be stored in a room without continuously operating ignition sources (for example: open flames, an operating gas appliance or an operating electric heater).

PROHIBITED: This sign indicates that the operation must be prohibited. Improper operation may cause severe damage or death to people.

WARNING: If not abide strictly, it may cause severe damage to the unit or the people.

NOTICE: If not abide strictly, it may cause slight or medium damage to the unit or the people.

OBSERVED: This sign indicates that the items must be observed. Improper operation may cause damage to people or property.

WARNING！

This product can't be installed at corrosive, inflammable or explosive environment or the place with special requirements, such as kitchen. Otherwise, it will affect the normal operation or shorten the service life of the unit, or even cause fire hazard or serious injury. As for above special places, please adopt special air conditioner with anti-corrosive or anti-explosion function.

Please read this operating manual carefully before operating the unit.

The air conditioner is charged with inflammable refrigerant R32 (GWP: 675).

Before using the air conditioner, please read the instruction manual.

Before installing the air conditioner, please read the instruction manual.

Before repairing the air conditioner, please read the instruction manual. The figures in this manual may be different with the material objects, please refer to the material objects for reference.

PROHIBITED
(1) The air conditioner should be grounded to avoid electric shock. Do not connect the ground wire to gas pipe, water pipe, lightning arrester or telephone wire.
(2) The appliance shall be stored in a well-ventilated area where the room size corresponds to the room area as specified for operation.
(3) The appliance shall be stored in a room without continuously operating open flames (for example an operating gas appliance) and ignition sources (for example an operating electric heater).
(4) According to federal/state/local laws and regulations, all packages and transportation materials, including nails, metal or wooden parts, and plastic packing material, must be treated in a safe way.

WARNING
(1) Please install according to this instruction manual. Installation must be performed in accordance with the requirement of NEC and CEC by authorized personnel only.
(2) Any person who is involved with working on or breaking into a refrigerant circuit should hold a current valid certificate from an industry-accredited assessment authority, which authorises their competence to handle refrigerants safely in accordance with an industry recognised assessment specification.
(3) Servicing shall only be performed as recommended by the equipment manufacturer. Maintenance and repair requiring the assistance of other skilled personnel shall be carried out under the supervision of the person competent in the use of flammable refrigerants.
(4) The appliance shall be installed in accordance with national wiring regulations.
(5) The fixed wires connecting to the appliance must be configured with all-pole disconnection device under voltage grade III according to wiring rules.

(6)	Air conditioner should be stored with protective measures against mechanical damage caused by accident.
(7)	If the installation space for air conditioner pipe is too small, adopt a protective measure to prevent the pipe from physical damage.
(8)	During installation, use the specialized accessories and components, otherwise water leakage, electric shock or fire hazard may occur.
(9)	Please install the air conditioner in a secure place that can withstand the weight of air conditioner. Insecure installation may cause the air conditioner falling down and lead to injury.
(10)	Be sure to adopt independent power circuit. If the power cord is damaged, it must be repaired by the manufacturer, service agent or other professional agents.
(11)	The air conditioner can be cleaned only after it is turned off and power-disconnected, otherwise electric shock may occur.
(12)	The air conditioner is not intended to be cleaned or maintained by children without supervision.
(13)	Do not alter the setting of pressure sensor or other protective devices. If the protective devices are short-circuited or changed against rules, fire hazard or even explosion may occur.
(14)	Do not operate the air conditioner with wet hands. Do not wash or sprinkle water on the air conditioner, otherwise malfunction or electric shock will occur.
(15)	Do not dry the filter with naked flame or an air blower; otherwise the filter will be out of shape.
(16)	If the unit is to be installed in a small space, please adopt protective measures to prevent the concentration of refrigerant from exceeding the allowable safety limit; excessive refrigerant leakage may lead to explosion.
(17)	When installing or re-installing the air conditioner, please keep the refrigerant circuit away from substances other than the specified refrigerant, such as air. Any presence of foreign substances will cause abnormal pressure change or even explosion, resulting in injury.

NOTICE
(1) Do not put a finger or other objects into the air inlet or air return grill.
(2) Please adopt safety protection measures before touching the refrigerant pipe, otherwise your hands may be hurt.
(3) Please arrange the drain pipe according to the instruction manual.
(4) Never stop the air conditioner by directly cutting off the power.
(5) Please select the proper copper pipe according to the requirement for pipe thickness.
(6) Indoor unit can only be installed indoors while outdoor unit can be installed either indoors or outdoors. Never install the air conditioner in the following places: a) Places with oil smoke or volatile liquid: plastic parts may deteriorate and fall off or even cause water leakage. b) Places with corrosive gas: copper pipe or the welding parts may be corroded and cause refrigerant leakage.
(7) Adopt proper measures to protect the outdoor unit from small animals because they may damage the electric components and cause malfunction of the air conditioner.

OBSERVED
(1) If wired control is to be used, it should be connected first before powering up the unit, otherwise the wired control may not be able to use.
(2) When installing the indoor unit, keep it away from television, wireless waves, and fluorescent.
(3) Only use soft dry cloth or slightly wet cloth with neutral detergent to clean the casing of the air conditioner.
(4) Before operating the unit under low temperature, connect it to power for 8 hours. If it is stopped for a short time, for example, one night, do not cut off the power (This is to protect the compressor).

2 Product Introduction

2.1 Overall Layout

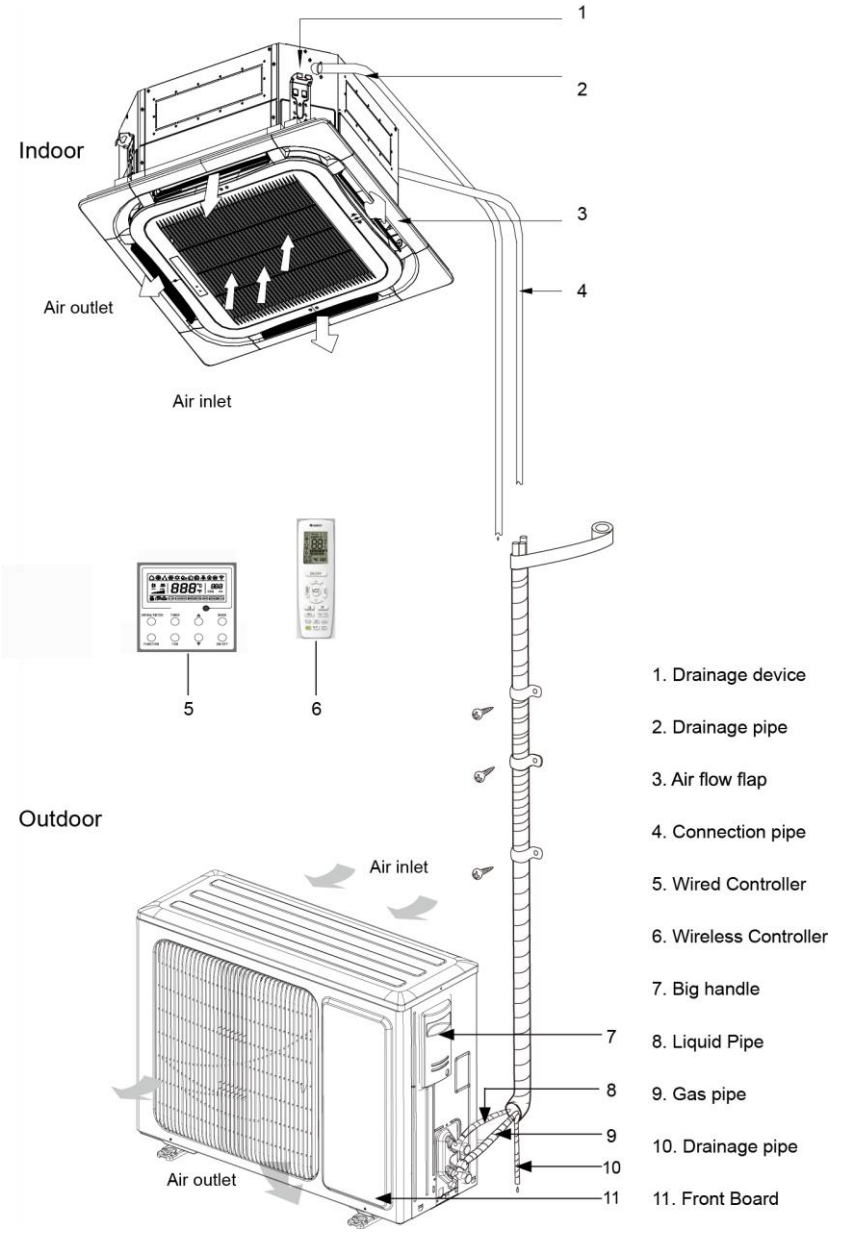

2.2 Product Operating Range

	Cooling	Heating
Outdoor temperature DB(℃)	-20~48	-20~24
Indoor temperature DB/WB(℃) （Maximum）	32/23	27/-

2.3 Standard Accessories

Indoor Unit Accessories				
No.	Name	Appearance	Q'ty	Usage
1	Drain Hose		1	To connect with the hard PVC drain pipe
2	Bolt with Washer		4	To fix the installation paperboard on the unit.
3	Washer		10	To be used together with the hanger bolt for installing the unit.
4	Installation Paperboard		1	Used for ceiling drilling
5	Gasket Mounting Board		4	Used to prevent gasket from falling off
6	Wireless Controller +Battery		1+2	To control the indoor unit
7	Sealing Plaster		1	Used for holes through the wall
8	Fastener		6	To fasten the sponge/ Heat-shringkable Bushing
9	Insulation		1	To insulate the gas pipe
10	Insulation		1	To insulate the liquid pipe
11	Sponge		4	To insulate the drain pipe
12	Removal-Proof Screw Nut		1	To connect gas pipe
13	Removal-Proof Screw Nut		1	To connect liquid pipe
14	Enswathement		2	Used for winding the pipe connecting the indoor and outdoor units
15	Heat-Shringkable Bushing		1	Connect the front panel to the main body

Indoor Unit Accessories				
No.	Name	Appearance	Q'ty	Usage
16	Flannelette		1	To prevent the communication wire from reaching out the electric raceway（only 35/50）

Outdoor Unit Accessories				
No	Name	Appearance	Q'ty	Usage
1	Drain Plug		1or3	To plug the unused drain hole.
2	Drainage Connecter	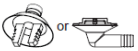	1	To connect with the hard PVC drain pipe

3 Installation

3.1 Installation Preparation

3.1.1 Notice on Installation

(1) Notice on Refrigerant Concentration before Installation.

This air conditioner uses R32 refrigerant. The construction area for installation, operation and storage of the air conditioner must be larger than the minimum construction area. The minimum area for installation is determined by:

1) Refrigerant charging quantity for the entire system (ex-factory charging quantity + additional charging quantity);

2) Checking out in the applicable tables:

a) For indoor unit, confirm the model of indoor unit and check the corresponding table.

b) For outdoor unit that is installed or placed indoors, select the corresponding table according to the height of the room.

Height of the room	Select the applicable table
＜1.8m	Floor standing type
≥1.8m	Wall mounted type

3) Refer to the following table to check out the minimum construction area.

Ceiling type		Wall mounted type		Floor standing type	
Weight(kg)	Area (m^2)	Weight(kg)	Area (m^2)	Weight (kg)	Area (m^2)
＜1.224	—	＜1.224	—	＜1.224	—
1.224	0.956	1.224	1.43	1.224	12.9
1.4	1.25	1.4	1.87	1.4	16.8
1.6	1.63	1.6	2.44	1.6	22.0
Ceiling type		Wall mounted type		Floor standing type	
Weight(kg)	Area (m^2)	Weight(kg)	Area (m^2)	Weight(kg)	Area (m^2)
1.8	2.07	1.8	3.09	1.8	27.8
2.0	2.55	2.0	3.81	2.0	34.3
2.2	3.09	2.2	4.61	2.2	41.5
2.4	3.68	2.4	5.49	2.4	49.4
2.6	4.31	2.6	6.44	2.6	58.0
2.8	5.00	2.8	7.47	2.8	67.3
3.0	5.74	3.0	8.58	3.0	77.2
3.2	6.54	3.2	9.76	3.2	87.9
3.4	7.38	3.4	11.0	3.4	99.2
3.6	8.27	3.6	12.4	3.6	111
3.8	9.22	3.8	13.8	3.8	124
4.0	10.2	4.0	15.3	4.0	137
4.2	11.3	4.2	16.8	4.2	151
4.4	12.4	4.4	18.5	4.4	166
4.6	13.5	4.6	20.2	4.6	182
4.8	14.7	4.8	22.0	4.8	198
5.0	16.0	5.0	23.8	5.0	215
5.2	17.3	5.2	25.8	5.2	232
5.4	18.6	5.4	27.8	5.4	250
5.6	20.0	5.6	29.9	5.6	269
5.8	21.5	5.8	32.1	5.8	289
6.0	23.0	6.0	34.3	6.0	309
6.2	24.5	6.2	36.6	6.2	330
6.4	26.1	6.4	39.1	6.4	351
6.6	27.8	6.6	41.5	6.6	374
6.8	29.5	6.8	44.1	6.8	397
7.0	31.3	7.0	46.7	7.0	420
7.2	33.1	7.2	49.4	7.2	445
7.4	34.9	7.4	52.2	7.4	470
7.6	36.9	7.6	55.1	7.6	496
7.8	38.8	7.8	58.0	7.8	522
8.0	10.8	8.0	61.0	8.0	549

(2) When installing an outdoor unit with single or double fans, hold the handle and then lift it up slowly (Do not touch the condenser with your hand or other objects). If you hold only one side of the casing, the casing may be pulled out of shape, so please hold the base of the unit as well. During installation, be sure to use the components specified in the instruction manual.

(3) Please use the charging machine specialized for R32 refrigerant; Before charging, keep the refrigerant tank in an upright position. After charging, stick a label on the air conditioner saying no excessive charging.

(4) The following tools will be used: 1) Liquid-level gauge; 2) Screwdriver; 3) Electric driven rotary hammer; 4) Drill; 5) Pipe expander; 6) Torque wrench; 7) Open-end wrench; 8) Pipe cutter; 9) Leak detector; 10) Vacuum pump; 11) Pressure gauge; 12) Universal meter; 13) Hexagon wrench; 14) Tapeline.

3.1.2 Selection of Installation Location

WARNING
①. If the outdoor unit will be exposed in strong wind, it must be securely located, otherwise it may fall down.
②. Install the air conditioner at a place where the inclination is less than 5°.
③. Do not install the unit at a place with direct sunlight.
④. Do not install the unit at a place with leakage of inflammable gas.

Selection of Installation Location for Indoor Unit (Select a location pursuant to the following condition).

(1) Air inlet and outlet of the indoor unit should be away from obstacles to make sure the unit's air flow can reach the entire room. Do not install the unit in a kitchen or a laundry.

(2) Install the unit in a room without naked flame, fire source or the risk of getting the refrigerant on fire.

(3) Select a location that can withstand 4 times the unit weight without increasing operating noise and vibration.

(4) The installation location must be level.

(5) The indoor piping length and wiring length should be within the allowable range.

(6) Select a place that can easily drain condensate and connect to the drain system of the air conditioner.

(7) If hoisting screw bolts are to be used, check whether the installation location is safe enough. If not safe, reinforce the location before installation.

(8) Indoor unit, power cord, connecting wires and communication cords should be at least 1m from television and radio. This is to prevent image interference or noise (Even at a distance of 1m, a very strong electric wave may still generate noise).

Selection of Installation Location for Outdoor Unit (Select a location pursuant to the following condition).

(1) Noise and air flow produced by the outdoor unit will not disturb the neighbors.

(2) Select a location that is safe and away from animals and plants. If not, please add safety fences to protect the unit.

(3) Install at a place with good ventilation. Make sure the outdoor unit stays at a well-ventilated place with no obstacles nearby that may obstruct the air inlet and outlet.

(4) The installation location should be able to withstand the weight and vibration of outdoor unit and allow the installation to be carried out safely.

(5) Avoid installing at a place with leakage of inflammable gas, oil smoke or corrosive gas.

(6) Keep it away from strong wind because strong wind will affect the outdoor fan and lead to insufficient air flow volume and thus affecting the unit's performance.

(7) Install the outdoor unit at a place that is convenient for it to be connected to the indoor unit.

(8) Away from any object that may get the air conditioner generating noise.

(9) Install the outdoor unit at a place where condensate can be easily drained.

3.1.3 Unit Dimension

WARNING
①. Install the indoor unit in a location which can withstand a load of at least five times the weight of the main unit and which will not amplify sound or vibration.
②. If the installation location is not strong enough, the indoor unit may fall and cause injuries.
③. If the job is done with the panel frame only, there is a risk that the unit will come loose. Please take care.

(1) Indoor unit

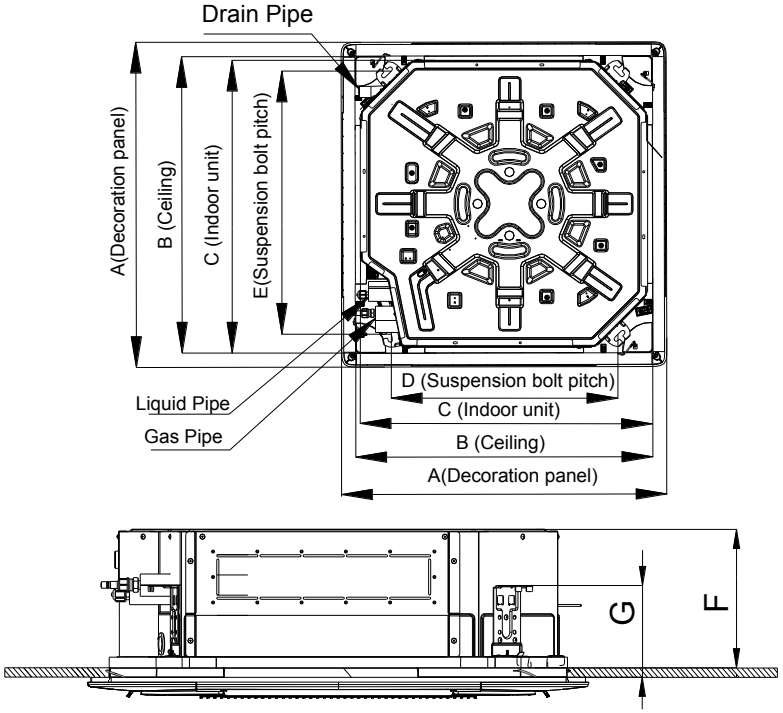

NOTICE

Drilling of ceiling opening and installation of air conditioner must be performed by professionals!

Unit: mm

Dimensions / Model	A	B	C	D	E	F	G
35	620	580	570	520	560	265	140
50	620	580	570	520	560	265	140
71	950	870	840	660	790	240	134
85	950	870	840	660	790	240	134
100	950	870	840	660	790	240	134
125	950	870	840	660	790	290	134
140	950	870	840	660	790	290	134
160	950	870	840	660	790	290	134

(2) Outdoor unit

35, 50, 71, 85.

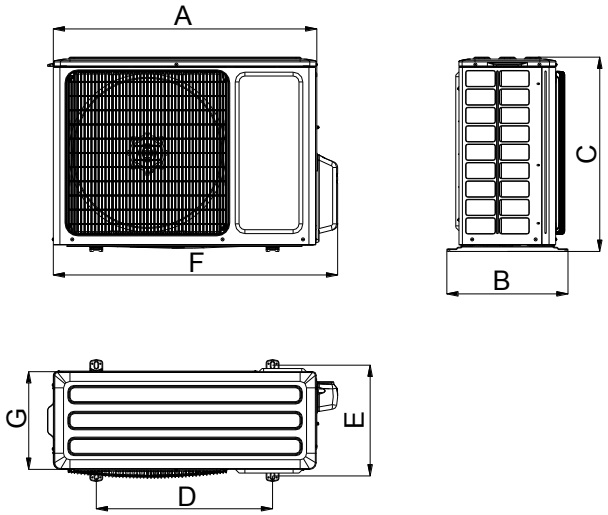

100, 125, 140, 100, 125, 140.

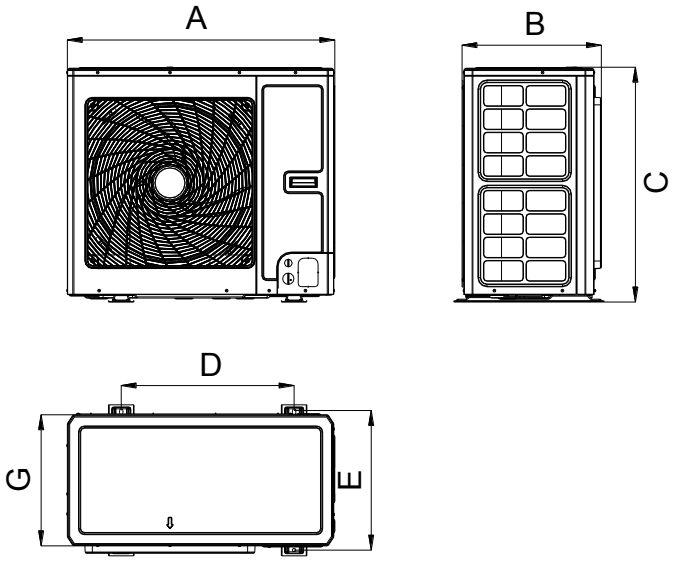

160

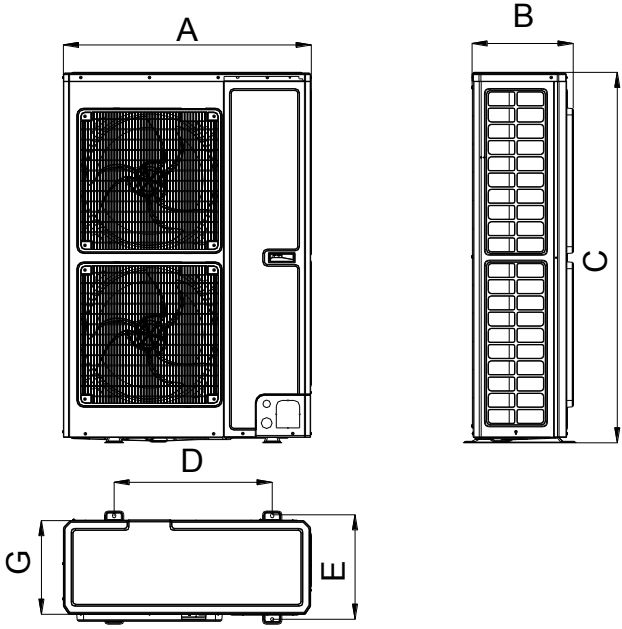

Unit: mm

Dimensions / Model	A	B	C	D	E	F	G
35	818	378	596	550	348	887	302
50	818	378	596	550	348	887	302
71	892	396	698	560	364	952	340
85	920	427	790	610	395	1002	370
100	940	530	820	610	486	/	460
100	940	530	820	610	486	/	460
125	940	530	820	610	486	/	460
125	940	530	820	610	486	/	460
140	940	530	820	610	486	/	460
140	940	530	820	610	486	/	460
160	900	412	1345	572	378	/	340

3.1.4 Diagram of Unit Installation Space and Location

(1) Diagram of installation space and location for outdoor unit (Notice: for best performance of the outdoor unit, make sure its installation space conforms to the following installation dimensions).

1) When one outdoor unit is to be installe

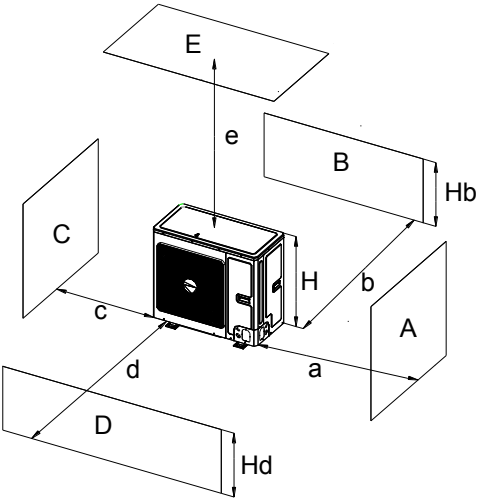

A~E	Hb Hd H		(mm)				
			a	b	c	d	e
B	—			⩾100			
A,B,C,	—		⩾300	⩾100	⩾100		
B,E	—			⩾100			⩾1000
A,B,C,E	—		⩾300	⩾150	⩾150		⩾1000
D	—					⩾1000	
D,E	—					⩾1000	≥1000
B,D	H_B< H_D	H_D>H		⩾100		⩾1000	
	H_B>H_D	H_D<H		⩾100		⩾1000	
B,D,E	H_B< H_D	H_B⩽1/2H		⩾250		⩾2000	⩾1000
		1/2H< H_B⩽H		⩾250		⩾2000	⩾1000
		H_B>H	Prohibited				
	H_B>H_D	H_D⩽1/2H		⩾100		⩾2000	⩾1000
		1/2H< H_D⩽H		⩾200		⩾2000	⩾1000
		H_D>1/2H	Prohibited				

2) When two or more outdoor units are to be installed side by side

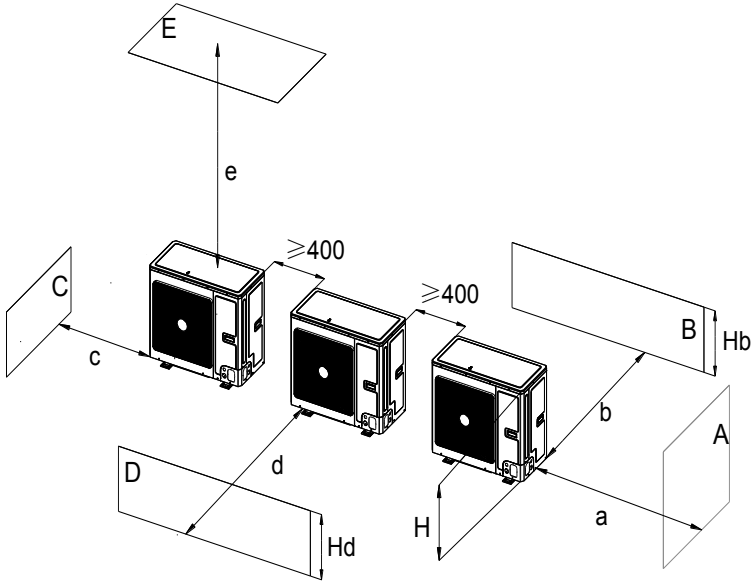

A~E	H_B H_D H		(mm)				
			a	b	c	d	e
A,B,C	—		≥300	≥300	≥1000		
A,B,C,E	—		≥300	≥300	≥1000		≥1000
D	—					≥2000	
D,E	—					≥2000	≥1000
B,D	H_B< H_D	H_D> H		≥300		≥2000	
	H_B＞H_D	H_D≤1/2H		≥250		≥2000	
		1/2H＜H_D≤H		≥300		≥2500	
B,D,E	H_B< H_D	H_B≤1/2H		≥300		≥2000	≥1000
		1/2H＜H_B≤H		≥300		≥2500	≥1000
		H_B＞H	Prohibited				
	H_B＞H_D	H_D≤1/2H		≥250		≥2500	≥1000
		1/2H＜H_D≤H		≥300		≥2500	≥1000
		H_D＞1/2H	Prohibited				

3) When outdoor units are installed in rows

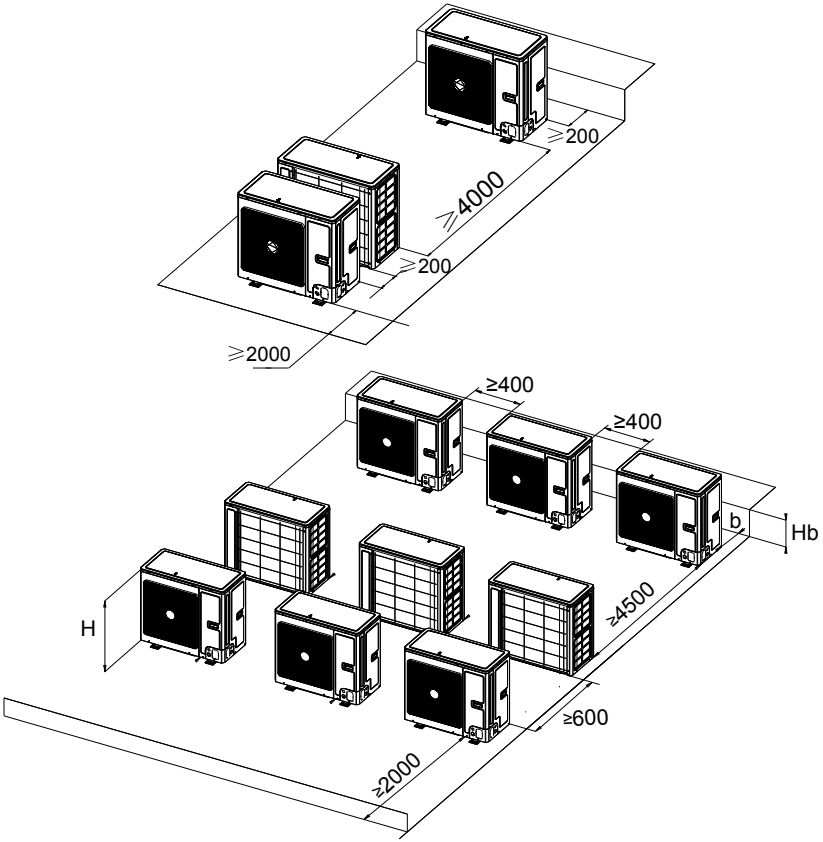

H_B H	B(mm)
$H_B \leqslant 1/2H$	$b \geqslant 250$
$1/2H < H_B \leqslant H$	$b \geqslant 300$
$H_B > H$	Prohibited

4) When outdoor units are installed one above another.

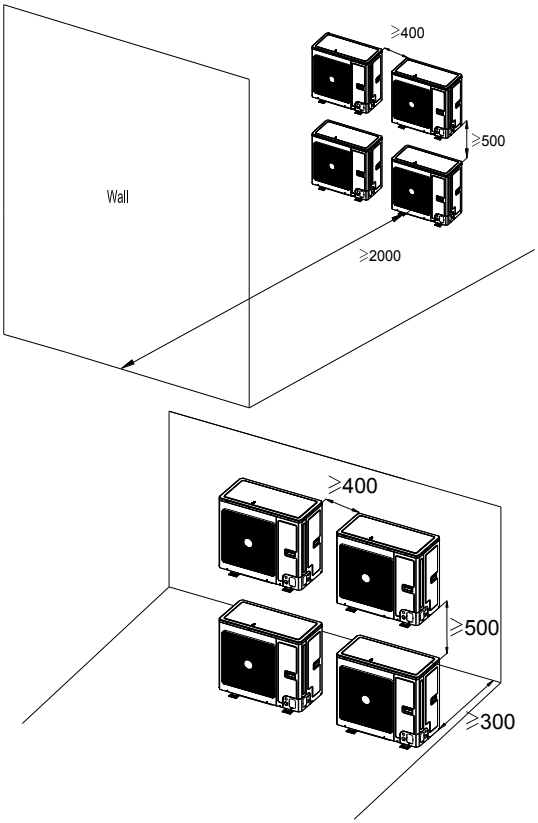

(2) Diagram of installation location and space for indoor unit (Notice: for the best performance of indoor unit, make sure its installation space conforms to the following installation dimensions).

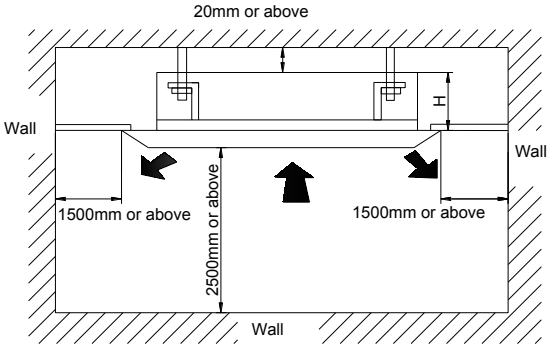

Model	H(mm)
35	285
50	285
71	260
85	260
100	260
125	310
140	310
160	310

3.2 Unit Installation

3.2.1 Indoor Unit Installation

In order to make the front panel cover 20mm of the ceiling, the distance between the ceiling and the unit should be 35mm or less. If the distance between the ceiling and the unit is above 35mm, add some ceiling material to shorten the distance. See the following diagram.

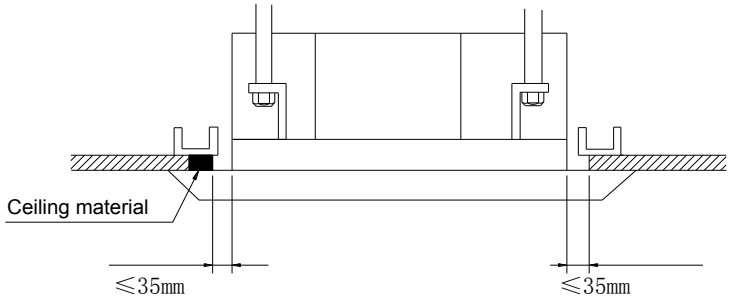

3.2.1.1 Hoisting the Main Body Unit

NOTICE
Please tightly screw up the nuts and bolts to prevent the air conditioner from falling.

(1) Installing the Suspension Bolts.

1) Using the installation template, drill holes for bolts (four holes).
2) Install the bolts to the ceiling at a place strong enough to hang the unit. Mark the bolt positions from the installation template. With a concrete drill, drill for 12.7 mm (1/2") diameter holes.
3) Insert the anchor bolts into the drilled holes, and drive the pins completely into the anchor bolts with a hammer.

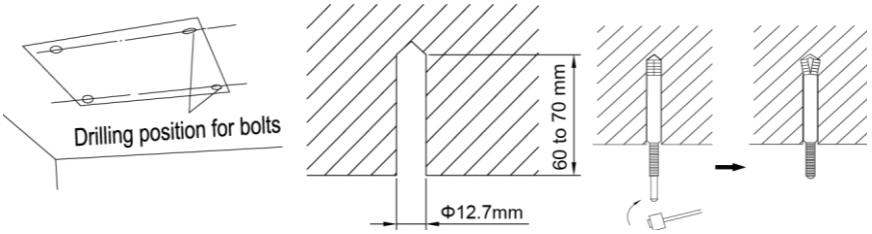

(2) Installing the Main Body Unit.

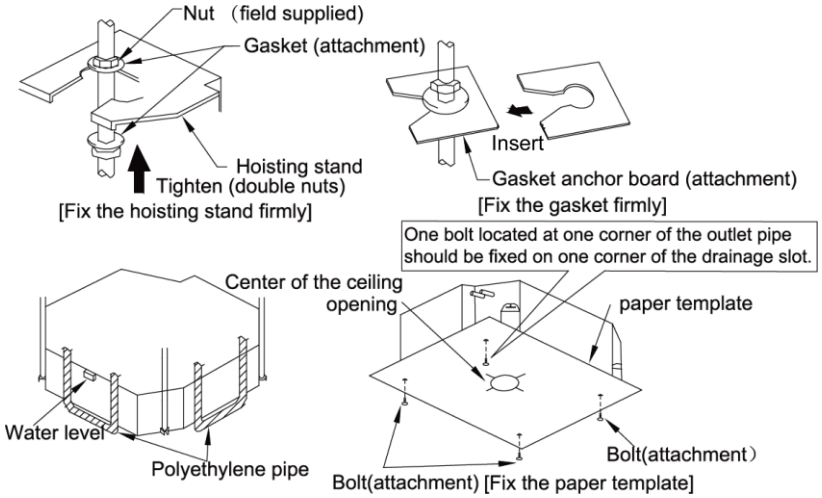

1) Install the hoisting stand on the hoisting screw by using nuts and gaskets at both the upper and lower sides of the hoisting stand. To prevent the gasket from breaking off, a gasket anchor board can be helpful.
2) Install the paper template on the unit, and fix the drain pipe at the outlet vent.
3) Adjust the unit to the best position.
4) Check if the unit is installed horizontally at four directions. If not, the water pump and the float switch would function improperly and even lead to water leakage.
5) Remove the gasket anchor board and tighten the nut remained.
6) Remove the paper template.

3.2.1.2 Leveling

The water level test must be done after installing the indoor unit to make the unit is horizontal, as shown below.

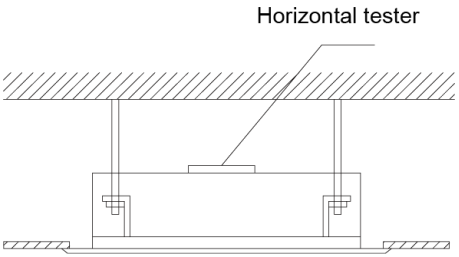

3.2.2 Outdoor Unit Installation

(1) If the outdoor unit is installed on a solid ground such as concrete, use M10 screw bolts and nuts to secure the unit and make sure the unit stands erect and level.

(2) Do not install it on top of the building.

(3) If it vibrates and causes noise, please add rubber cushion between the outdoor unit and the installation base.

(4) When the outdoor unit is in heating or defrosting, it needs to drain water. When installing the drain pipe, plug the accompanied drainage connector to the drainage hole on the chassis of the outdoor unit. Then connect a drain hose to the drainage connector (If drainage connector is used, the outdoor unit should be at least 10cm from the installation ground). See the figures below.

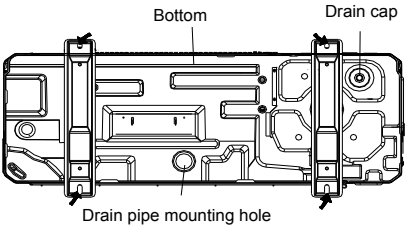

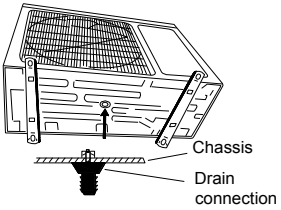

3.2.3 Connection Pipe Installation

3.2.3.1 Installation Notice and Requirement on Connection Pipe

NOTICE
①. Indoor unit adopts special joints that can't be disassembled. The installation method is the same as the unit with ordinary joints. However, because the joints can't be removed, if the connection is not good and causes leakage, the joints need to be cut and welded again for replacement.
②. The removal-proof screw nut must be connected to the indoor unit.

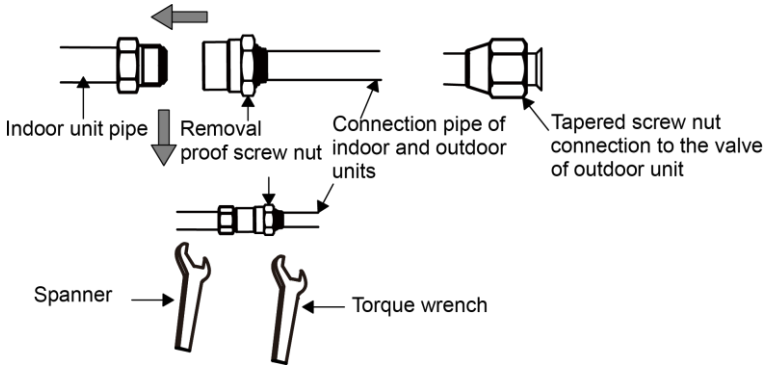

Installation method: Connect the connection pipes first to the indoor unit and then to the outdoor unit. When bending a connection pipe, be careful not to damage the pipe. Do not over-tighten the screw nut, otherwise leakage will occur. Besides, the outside of connection pipe should be added with a layer of insulating cotton to protect it from mechanical damage during installation, maintenance and transportation.

Item / Model	Size of Fitting Pipe(in.)		Maximum pipe length(m)	Biggest drop between indoor and outdoor units (m)	Drain pipe (outer dimension x wall thickness) (mm)
	Liquid pipe	Gas pipe			
35	1/4	3/8	30	15	Φ25×1.5
50		1/2	35	20	
71	3/8	5/8	50	25	
85			50	25	
100			65	30	
125			75	30	
140			75	30	
160			75	30	

Connection pipe should adopt water-proof insulating material. Its wall thickness should be 0.5-1.0mm and the pipe wall should be able to withstand 6.0MPa. The longer the connection pipe is, the worse cooling and heating performance it has.

When the drop between indoor and outdoor units is larger than 10m, an oil return bend should be added every 6 meters.

The requirement on the adding of oil return bend is as below:

(1) Outdoor unit is beneath the indoor unit.

There's no need to add non-return bend at the lowest or highest position of the vertical pipe, as shown below:

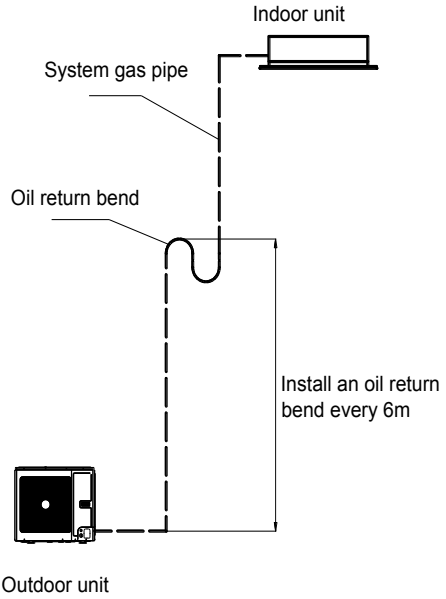

(2) Outdoor unit is above the indoor unit.

It's necessary to add oil return bend and non-return bend at the lowest and highest position of the vertical pipe, as shown below:

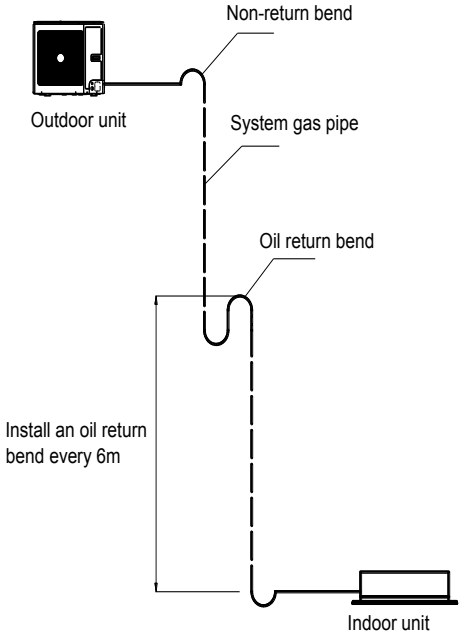

Dimensions for the making of oil return bend are as follows:

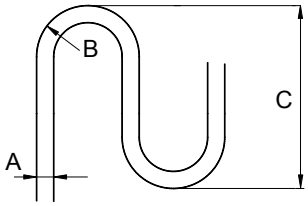

A		B(mm)	C(mm)
mm	in.		
Φ12	1/2	⩾26	⩽150
Φ16	5/8	⩾33	⩽150

3.2.3.2 Pipe Flaring

(1) Cut the connection pipe with a pipe cutter.

(2) The mouth of connection pipe should face downward. Remove burrs with the

cut surface so that the chips do not enter the pipe.

(3) Remove the cut-off valve of outdoor unit and take out the flare nut from the bag of indoor unit accessories. Then fit the flare nut on the pipe and use a flaring tool to flare the mouth of connection pipe.

(4) Check whether the flaring part has cracked. See the following figure.

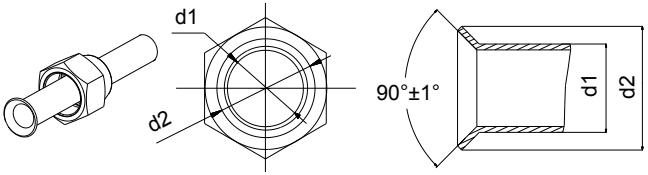

3.2.3.3 Pipe Bending

(1) The pipes are shaped by your hands. Be careful not to collapse them.

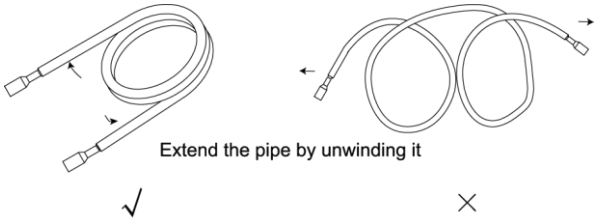

(2) Do not bend the pipes in an angle more than 90°.

(3) When pipes are repeatedly bent or stretched, the material will harden, making it difficult to bend or stretch them any more. Do not bend or stretch the pipes more than three times.

(4) When bending the pipe, do not bend it as is. The pipe will be collapsed. In this case, cut the heat insulating pipe with a sharp cutter as shown in Fig.15, and bend it after exposing the pipe. After bending the pipe as you want, be sure to put the heat insulating pipe back on the pipe, and secure it with tape.

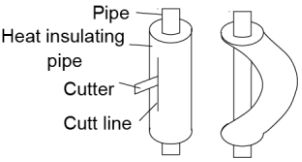

3.2.3.4 Connection Pipe of Indoor and Outdoor Units

NOTICE
①. Connect the pipe to the unit. Please follow the instructions stated in the figures below. Use both spanner and torque wrench.
②. When connecting the tapered screw nut, first apply chilled machine oil on its inner and outer surface and then screw it up for 3~4 circles.
③. Confirm the tightening torque by referring to the following table (If the screw nut is over-twisted, it may be damaged and cause leakage).
④. Check whether gas leakage occurs to the connection pipe and then apply thermal insulation, as shown below.
⑤. Wind sponge around the joint of gas pipe and heat insulation sheath of gas collecting pipe.
⑥. Be sure to connect gas pipe after liquid pipe is connected.

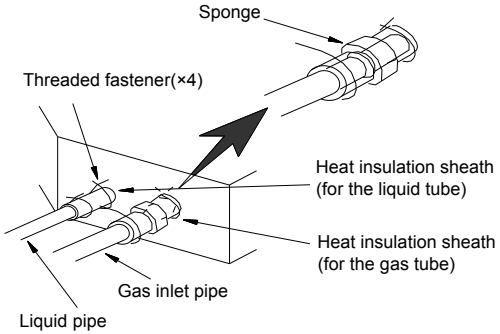

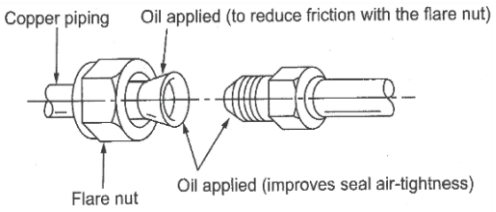

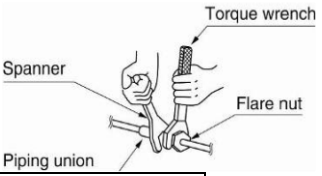

Pipe diameter (in.)	Tightening torque (N·m)
1/4	15-30
3/8	35-40
1/2	45-50
5/8	60-65
3/4	70-75
7/8	80-85

Screw on the flare nut of the flaring connecting pipe on the outdoor unit valve.

The method of screwing the flare nut is the same with that for indoor unit.

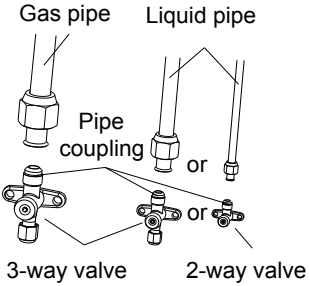

3.2.3.5 Thermal Insulation of Pipe Joint (Only for Indoor Unit)

Stick coupler heat insulation (large and small) to the place where connecting pipes.

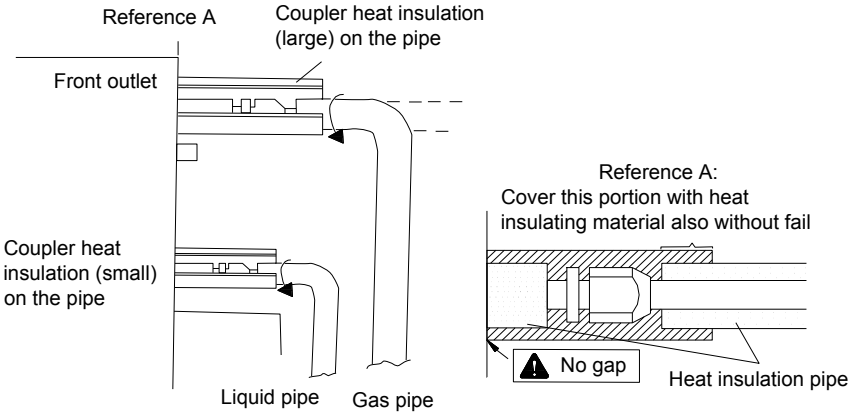

3.2.3.6 Sealing of the Knock-off Hole

As for the built-in valve model, during the installation process for connection pipe, when the connection pipe is passing through the knock-off hole, conduct sealing with insulated cotton in the knock-off hole of outdoor unit to prevent small animals from entering. See the following figure.

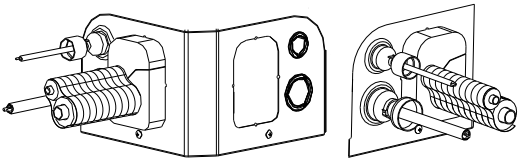

Notice: Only for the 100, 125, 140,125,140,160.

3.2.4 Connection Pipe Vacuum Pumping and Leak Detection

3.2.4.1 Vacuum Pumping

NOTICE
Make sure the outlet of vacuum pump is away from fire source and is well-ventilated.

(1) Remove the caps of the liquid valve, gas valve and also the service port.

(2) Connect the hose at the low pressure side of the manifold valve assembly to the service port of the unit's gas valve, and meanwhile the gas and liquid valves should be kept closed in case of refrigerant leak.

(3) Connect the hose used for evacuation to the vacuum pump.

(4) Open the switch at the lower pressure side of the manifold valve assembly and start the vacuum pump. Meanwhile, the switch at the high pressure side of the manifold valve assembly should be kept closed, otherwise evacuation would fail.

(5) The evacuation duration depends on the unit's capacity, generally.

Model	Time(min)
35	15
50	20
71, 85, 100	30
125, 140,160	45

And verify if the pressure gauge at the low pressure side of the manifold valve assembly reads -1.0Mp (-75cmHg), if not, it indicates there is leak somewhere. Then, close the switch fully and then stop the vacuum pump.

(6) Wait for 10min to see if the system pressure can remain unchanged. During this time, the reading of the pressure gauge at the low pressure side can not be larger than 0.005Mp (0.38cmHg).

(7) Slightly open the liquid valve and let some refrigerant go to the connection pipe to balance the pressure inside and outside of the connection pipe, so that air will not come into the connection pipe when removing the hose. Note that the gas and liquid valve can be opened fully only after the manifold valve assembly is removed.

(8) Place back the caps of the liquid valve, gas valve and also the service port.

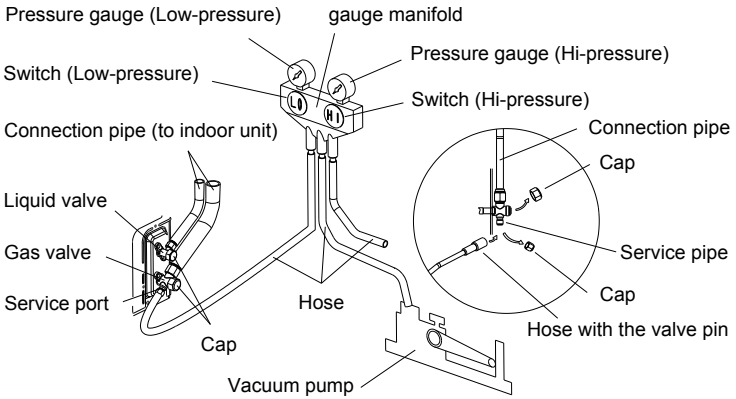

Notice:

For large-size units, there are maintenance ports for liquid valve and gas valve. During evacuation, you may connect the two hoses of the branch valve assembly to the maintenance ports to speed up the evacuation.

3.2.4.2 Leak Detection Methods

The following leak detection methods are deemed acceptable for systems containing flammable refrigerants.

Electronic leak detectors shall be used to detect flammable refrigerants, but the sensitivity may not be adequate, or may need re-calibration. (Detection equipment shall be calibrated in a refrigerant-free area).

Ensure that the detector is not a potential source of ignition and is suitable for the refrigerant used. Leak detection equipment shall be set at a percentage of the LFL of the refrigerant and shall be calibrated to the refrigerant employed and the appropriate percentage of gas (25 % maximum) is confirmed.

Leak detection fluids are suitable for use with most refrigerants but the use of detergents containing chlorine shall be avoided as the chlorine may react with the

refrigerant and corrode the copper pipe-work.

If a leak is suspected, all naked flames shall be removed/extinguished. If a leakage of refrigerant is found which requires brazing, all of the refrigerant shall be recovered from the system, or isolated (by means of shut off valves) in a part of the system remote from the leak. Oxygen free nitrogen (OFN) shall then be purged through the system both before and during the brazing process.

3.2.5 Refrigerant Adding

NOTICE

Before and during operation, use an appropriate refrigerant leak detector to monitor the operation area and make sure the technicians can be well aware of any potential or actual leakage of inflammable gas. Make sure the leak detecting device is applicable to inflammable refrigerant. For example, it should be free of sparks, completely sealed and safe in nature.

See the following table for the amount of additional refrigerant.

<table>
<tr><th>Item / Model</th><th>Standard Pipe Length</th><th>Unnecessary Charge Pipe Length</th><th>Additional Refrigerant Amount for Extra Pipe</th></tr>
<tr><td>35</td><td rowspan="6">5.0m</td><td rowspan="6">≤7.0m</td><td rowspan="2">16g/m</td></tr>
<tr><td>50</td></tr>
<tr><td>71</td><td rowspan="8">40g/m</td></tr>
<tr><td>85</td></tr>
<tr><td>100</td></tr>
<tr><td>125</td></tr>
<tr><td>140</td><td rowspan="2">7.5m</td><td rowspan="2">≤9.5m</td></tr>
<tr><td>160</td></tr>
</table>

3.2.6 Installation of Drain Pipe

3.2.6.1 Indoor Side Drainage Pipe

(1) Keep pipe size equal to or greater than that of the connecting pipe

(2) Install the drain piping as shown and take measures against condensation.

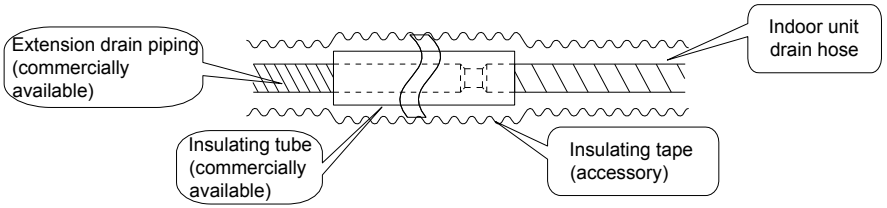

(3) Keep piping as short as possible and slope it downwards at a gradient of at least 1/100 so that air may not remain trapped inside the pipe.。

(4) If the drain pipe can't be installed at a proper inclination, then add drain lift pipe.

(5) In order to make sure the drain hose is straight, the hangers should keep a distance of 1~1.5m from one another.

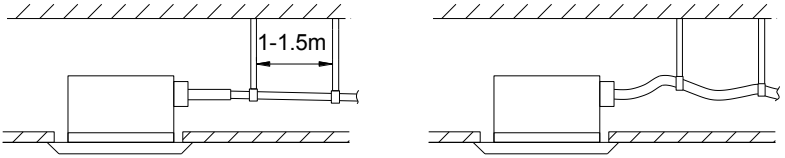

√（Correct）1/100 or more gradient x (wrong)

(6) Use the drain hose that is delivered together with the unit.

(7) Insert the drain hose into the drain faucet.

(8) For the purpose of thermal insulation, wind a large piece of sponge around the clamp of drain hose.

(9) Apply thermal insulation for the indoor drain hose.

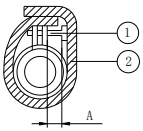	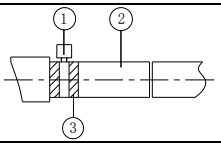
During the installation, distance from soft drain pipe to the gasket is A mm when the bolt is tightened. It is not allowed to apply PVC or other related glue in the joints of two ends of drain pipe. ①. Metal clamp (accessory) ②. Insulation sponge (accessory)	Insulate the pipe clamp and the drain hose using heat insulation sponge. ①. Metal clamp ②. Drain hose (accessory) ③. Grey tape (accessory)

Indoor Unit	A mm
35	≤12
50	≤12
71	≤15
85	≤15
100	≤15
125	≤15
140	≤15
160	≤15

3.2.6.2 Outdoor Side Drainage Pipe

(1) If the outdoor unit is underneath the indoor unit, arrange the pipeline according to the following diagram.

1) Drain hose should be placed on the ground and its end should not be immersed into water. The whole pipeline should be supported and fixed onto the wall.
2) Wind the insulating tape from bottom to top.
3) The whole pipeline should be wound with insulating tape and fixed onto the wall with saddles.

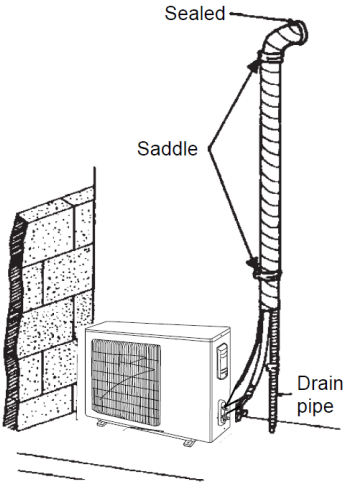

(2) If the outdoor unit is above the indoor unit, arrange the pipeline according to the following diagram.

1) Wind the insulating tape from bottom to top.
2) The whole pipeline should be wound together to avoid water returning to the room.

3) Use saddles to fix the whole pipeline onto the wall.

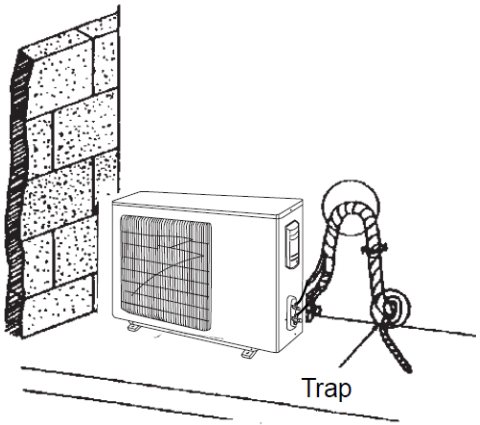

3.2.6.3 Notice on Drain Lift Pipe

(1) The drain lift pipe should be 1000mm or less away from ground, as shown below.

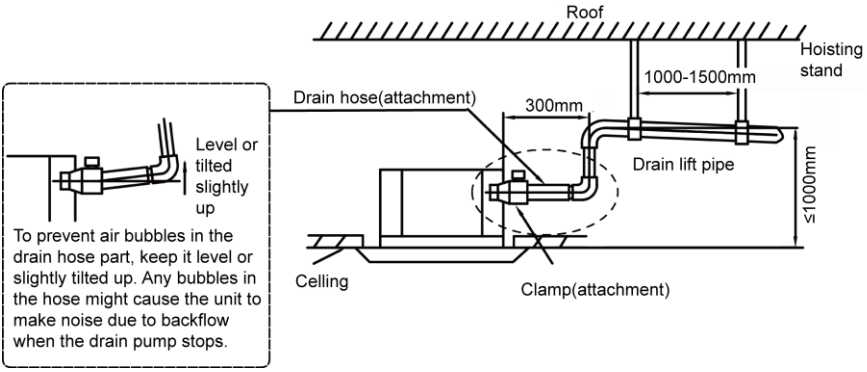

(2) If multiple drain pipes are to be converged, please install according to the following process. Make sure the main drain pipe is laid downward at a certain angle:

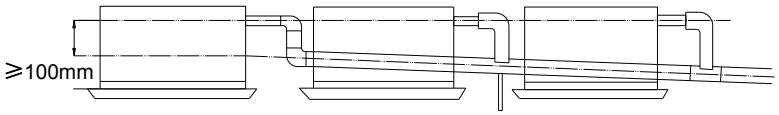

T-joint converging drain pipes

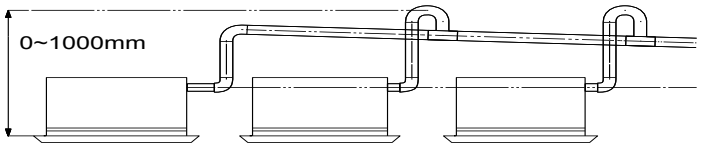

T-joint converging drain pipes

Notice: Specifications of the converging drain pipes should be applicable to the operating capacity of the units.

(1) Drain branch should be connected to the vertical or horizontal part of the main drain pipe.

(2) Horizontal pipe should not be connected to the vertical pipe that is on the same level. It should be connected in the following way:

1) Install 3-way connector of drainage pipe joint, as shown in the left figure.
2) Install drain elbow as shown in the middle figure.
3) Install horizontal pipe as shown in the right figure.

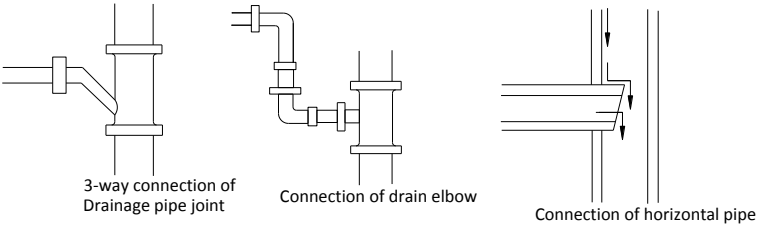

3.2.6.4 Check Drainage

After the pipeline work is finished, check whether the drainage can go smoothly.

(1) Add slowly about 1L of water into the water tray. After the electric circuit is completed, check the drainage condition during refrigerating operation.

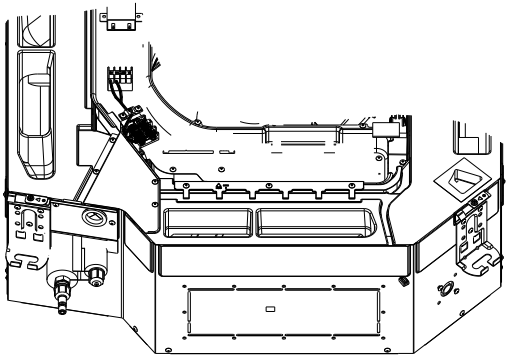

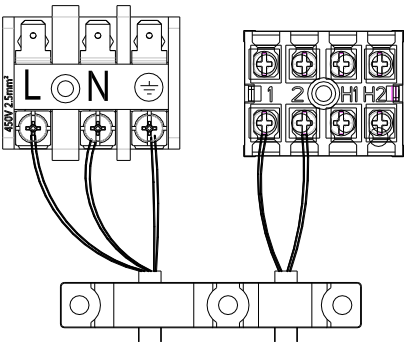

(2) See the following diagram for the method of water filling.

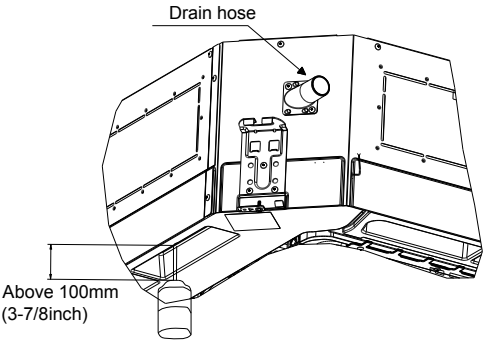

3.2.7 Installing the Front Panel

As shown below, take off the 4 corner covers from the front panel and loose the hexagon screw bolts on the 4 fasteners to the maximum. The position marked with “PIPING SIDE” on the front panel will direct right at the pipe mouth of the indoor unit.

(1) Temporarily hang the 4 fasteners on the corresponding hooks of the main body of the indoor unit (Do not let the conducting wires get involved into the sealing material).

(2) Screw in the hexagon screws beneath the 4 fasteners by about 15mm (front panel will rise).

(3) As shown below, turn the front panel according to the arrow direction so that the front panel can be well connected with the ceiling.

(4) Screw up the screws until the thickness of the sealing material between the front panel and the ceiling is 5-8mm.

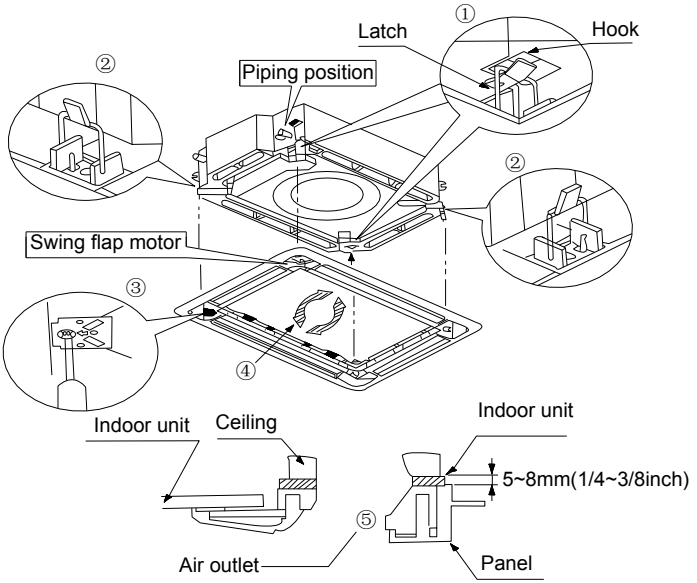

Notice

(1) Improper screw looseness will lead to the following problem.

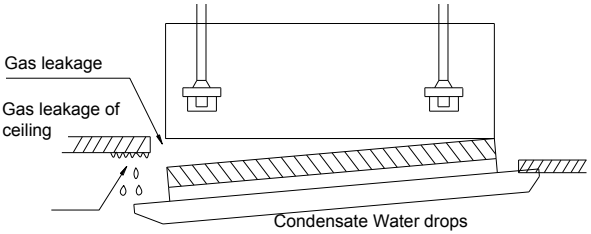

(2) After the screws are tightened, if there is still a gap between the ceiling and the decorative front panel, adjust the height of the unit again (as shown below).

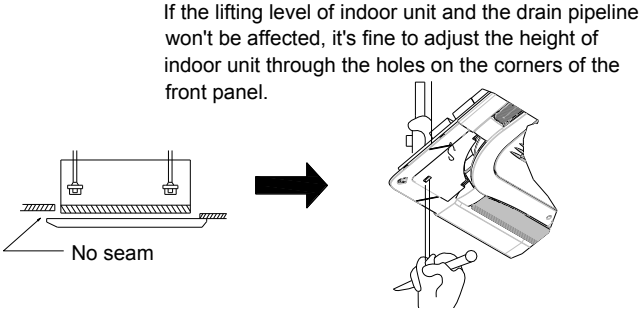

(3) After installing the front panel, make sure there's no gap between the unit and the front panel.

(4) Circuit of the decorative front panel.

Connect the front panel to the main body through the corresponding slots. Match the slots according to their different size.

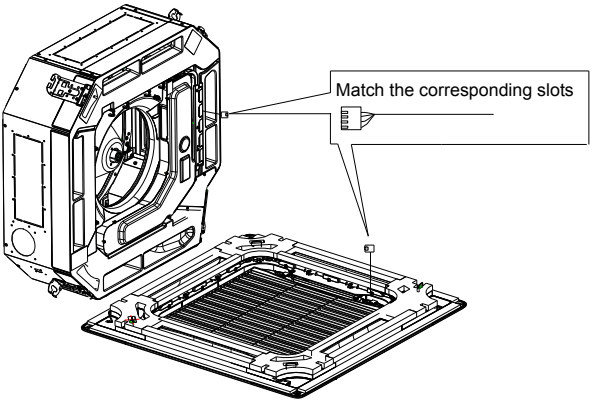

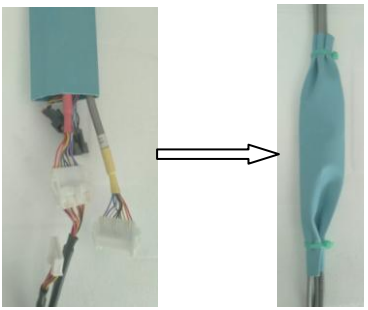

Warning
After installing the panel, the insulated protective cover with the thickness of 1mm shall be used to wrap the wiring terminal, Tighten the insulated glue cover on both sides with bonding tie to fix it.

(5) After connecting the communication wire, attach the flannelette on the foam to prevent the communication wire from reaching out the electric raceway（for 35/50）.

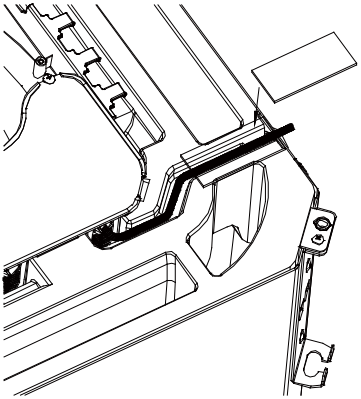

3.3 Electrical Installation

3.3.1 Requirement and Notice on Electrical Installation

WARNING:

The electrical installation for the air conditioner should observe the following requirements:

①. The electrical installation must be conducted by professionals in compliance with local laws and regulations and the instructions in this

manual. Never extend the power cord. The electric circuit must be equipped with a circuit breaker and air switch both with sufficient capacity. .

②. The unit's operating power must be within the nominal range stated in the instruction manual. Use a specialized power circuit for the air conditioner. Do not draw power from another power circuit.

③. The air conditioner circuit should be at least 1.5m away from any inflammable surface.

④. The external power cord, connection wire of indoor and outdoor units and the communication cords must be effectively fixed.

⑤. The external power cord, connection wire of indoor and outdoor units and the communication cords can't directly contact any hot objects. For example: they must not contact chimney pipes, warm gas pipes or other hot objects.

⑥. The external power cord, communication cords, and the connection wire of indoor and outdoor units must not be squeezed. Never pull, stretch or bend the wires.

⑦. The external power cord, communication cords and the connection wire of indoor and outdoor units must not collide with any metal beam or edge on the ceiling, or touch any metal burrs or sharp metal edge around.

⑧. Connect wires correspondingly by referring to the circuit diagram labeled on the unit or electric box. Screws must be tightened up. Slipped screws must be replaced by specialized flat-head screws.

⑨. Please use the power cables that are delivered along with the air conditioner. Do not change the power cables arbitrarily. Do not change the length and terminals of the power cables. If you want to change the power cables, please contact C&H's local service center.

⑩. Wiring terminals should be connected firmly to the terminal board. Loose connection is forbidden.

⑪. After the electrical installation is finished, please use wire clamps to secure the power cord, connection wire of indoor and outdoor units and the communication cords. Make sure the wires are not clamped too tight.

⑫. The wire gauge of power cord should be large enough. Damaged power cord or other wires must be replaced by specialized wires. Wiring work must be done according to national wiring rules and regulations.

3.3.2 Electrical Parameters

Model	Power supply	Fuse capacity	Circuit breaker capacity	Min. sectional area of power cord
	V/Ph/Hz	A	A	mm^2
Indoor unit	220-240V 1N~50Hz 208-230V 1N~60Hz	3.15	6	1.0

Model	Power supply	Circuit breaker capacity	Min. sectional area of power cord
	V/Ph/Hz	A	mm^2
35	220-240V 1N~50Hz 208-230V 1N~60Hz	16	1.5
50		16	1.5
71		20	2.5
85		25	2.5
100		32	4.0
125		32	4.0
140		40	6.0
100	380-415V 3N~50Hz/60Hz	16	1.5
125		16	1.5
140		16	1.5
160		16	1.5

NOTICE:

①. Fuse is located on the main board.

②. Install a circuit breaker at every power terminal near the units (indoor and outdoor units) with at least 3mm contact gap. The units must be able to be plugged or unplugged.

③. Circuit breaker and power cord specifications listed in the above table are determined based on the maximum power input of the units.

④. Specifications of power cords listed in the above table are applicable in a working condition where ambient temperature is 40℃ and multi-core copper cable (e.g. YJV copper cable, with insulated PE and PVC sheath) is protected by a conduit, and is resistant to 90℃ in maximum (See IEC 60364-5-52). If working condition changes, please adjust the specifications according to national standards.

⑤. Specifications of circuit breaker are based on a working condition where

the working temperature is 40℃. If working condition changes, please adjust the specifications according to national standards.

⑥. Adopt 2pc of 0.75mm² power cords to be the communication cords between indoor and outdoor units. The maximum length is 100m. Please select a proper length according to local conditions. Communication cords must not be twisted together. To be in compliance EN 55014, it is necessary to use 8 meters long wire.

⑦. Adopt 2pc of 0.75mm² power cords to be the communication cords between wired control and indoor unit. The maximum length is 30m. Please select a proper length according to local conditions. Communication cords must not be twisted together. To be in compliance EN 55014, it is necessary to use 7.5 meters long wire.

⑧. The wire gauge of communication cord should not be less than 0.75mm². It's recommended to use 0.75mm² power cords as the communication cords.

3.3.3 Connection of Power Cord and Communication Cord

(1) For solid wires (as shown below):

1) Use wire cutters to cut off the wire end and then peel away about 25mm of the insulation layer.
2) Use a screwdriver to unscrew the terminal screw on the terminal board.
3) Use nippers to bend the solid wire into a ring that fits the terminal screw.
4) Form a proper ring and then put it on the terminal board. Use a screwdriver to tighten up the terminal screw.

(2) For strand wires (as shown below):

1) Use wire cutters to cut off the wire end and then peel away about 10mm of the insulation layer.
2) Use a screwdriver to unscrew the terminal screw on the terminal board.
3) Use a round terminal fastener or clamp to fix the round terminal firmly on the peeled wire end.
4) Locate the round terminal conduit. Use a screwdriver to replace it and tighten up the terminal screw (as shown below).

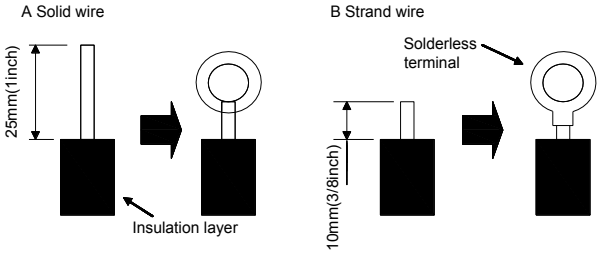

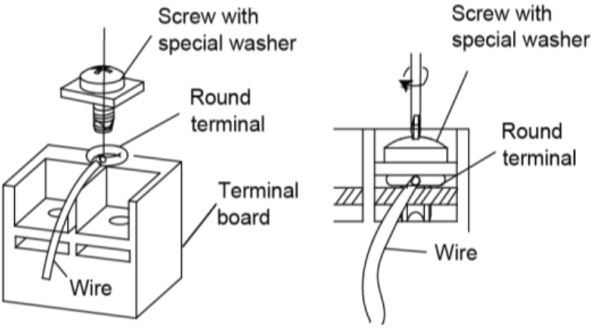

(3) How to connect the connection wire and power cord.

Lead the connection wire and power cord through the insulation tube. Then fix the wires with wire clamps (as shown in the following figure).

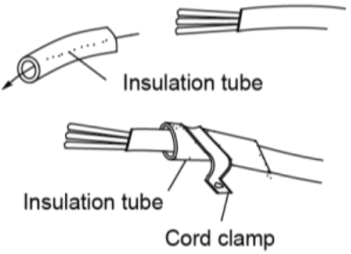

Warning	
①.	Before working, please check whether the indoor and outdoor units are powered on.
②.	Match the terminal numbers and wire colors with the colors indicated in the indoor unit.
③.	Wrong wire connection may burn the electrical components.
④.	Connect the wires firmly to the wiring box. Incomplete installation may lead to fire hazard.
⑤.	Please use wire clamps to secure the external covers of connecting wires. (Insulators must be clamped securely; otherwise, electric leakage may occur.)
⑥.	Ground wire should be connected.

(4) Wire between indoor and outdoor units.

Single-phase unit: 35, 50, 71, 85.

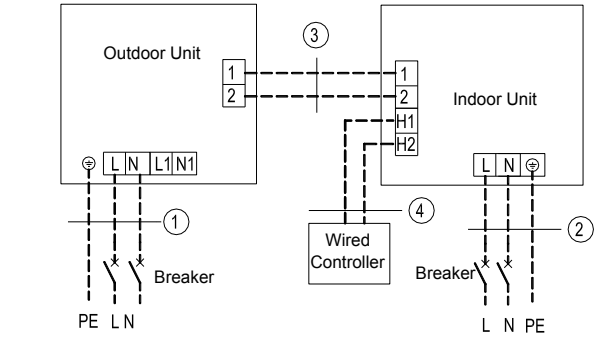

Power:220-240V~50Hz/208-230V~60Hz Power:220-240V~50Hz/208-230V~60Hz

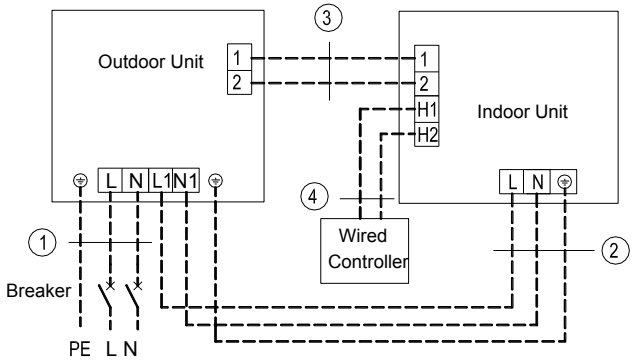

Power:220-240V~50Hz/208-230V~60Hz Power:220-240V~50Hz/208-230V~60Hz

35
50
①. Power cord 3×1.5mm²
②. Power cord 3×1.0mm²
③. Communication Cords 2×0.75mm^2
④. Communication Cords 2×0.75mm^2

71
85
①. Power cord 3×2.5mm²
②. Power cord 3×1.0mm²
③. Communication Cords 2×0.75mm²
④. Communication Cords 2×0.75mm²

Single-phase unit: 100, 125, 140.

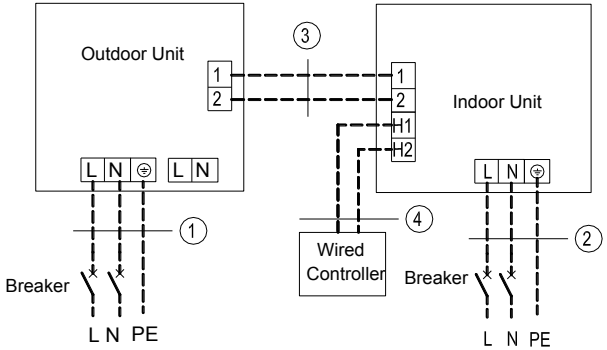

Power:220-240V~50Hz/208-230V~60Hz Power:220-240V~50Hz/208-230V~60Hz

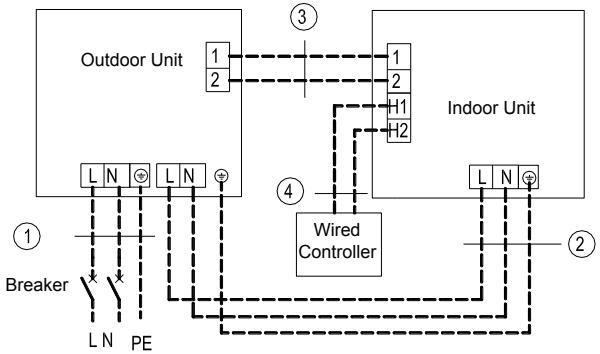

Power:220-240V~50Hz/208-230V~60Hz Power:220-240V~50Hz/208-230V~60Hz

100
125
①. Power cord 3×4.0mm²
②. Power cord 3×1.0mm²
③. Communication Cords 2×0.75mm²
④. Communication Cords 2×0.75mm²

140
①. Power cord 3×6.0mm²
②. Power cord 3×1.0mm²
③. Communication Cords 2×0.75mm²
④. Communication Cords 2×0.75mm²

Three-phase unit: 100, 125, 140, 160

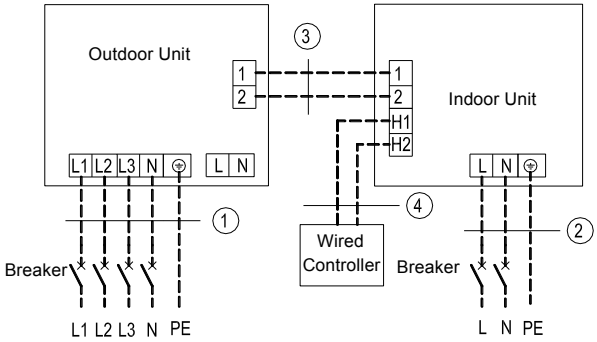

Power:380-415V 3N ~ 50Hz/60Hz Power:220-240V~50Hz/208-230V~60Hz

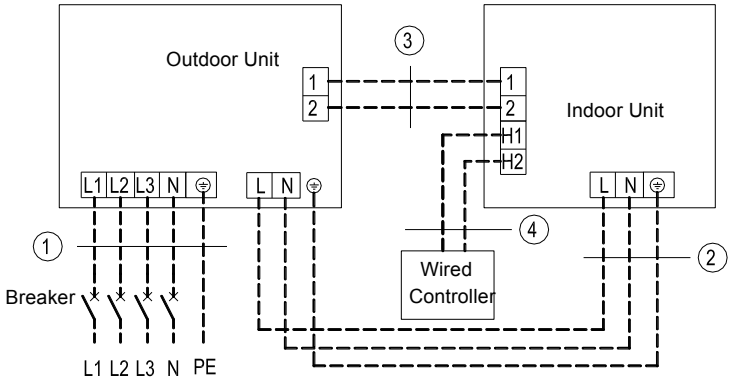

Power:380-415V 3N ~ 50Hz/60Hz Power:220-240V~ 50Hz/208-230V~60Hz

100
125
140
160
①. Power cord 5×1.5mm²
②. Power cord 3×1.0mm²
③. Communication Cords 2×0.75mm²
④. Communication Cords 2×0.75mm²

(5) Electrical wiring of indoor unit and Electrical wiring of outdoor unit.

Warning	
①.	High and low voltage wires should be led through different rubber rings of the electric box cover.
②.	Do not bundle up the connection wire and communication wire of wired control or lay them side by side, otherwise errors will occur.
③.	High and low voltage wires should be secured separately. Secure the former ones with big clamps and the latter ones with small clamps.
④.	Use screws to tighten up the connection wires and power cords of indoor and outdoor units on the terminal board. Wrong connection may lead to fire hazard.
⑤.	If the connection wires of indoor unit (outdoor unit) and power cords are not correctly connected, the air conditioner may get damaged.
⑥.	Ground the indoor and outdoor units through connecting the ground wire.
⑦.	The units should comply with applicable local and national rules and regulations on power consumption.
⑧.	When connecting the power cord, make sure the phase sequence of the power supply matches with the corresponding terminals, otherwise the compressor will get reversed and operate abnormally.

1) Indoor side.

Take off the electric box cover from the sub-assembly of electric box. Then connect the wires. Connect the connection wires of indoor unit according to the corresponding marks.

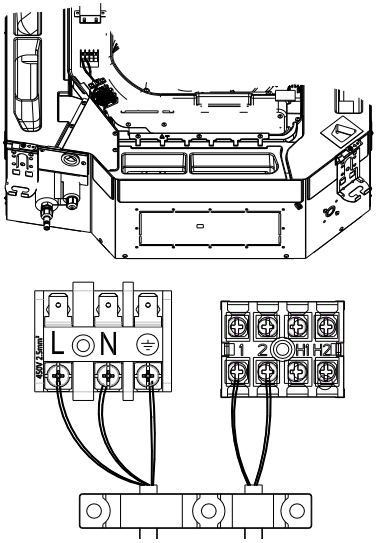

2) Outdoor side.

Remove the big handle/front panel of the outdoor unit and insert one end of the communication cord and the power cord to the terminal board.

Single-phase unit: 35, 50, 71, 85

a) Wire routing of separated power supply:

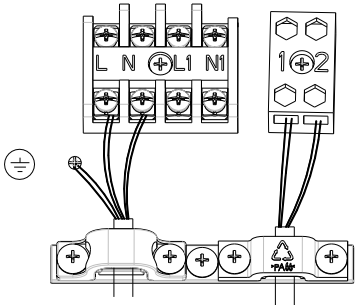

b) Wire routing of unified power supply：

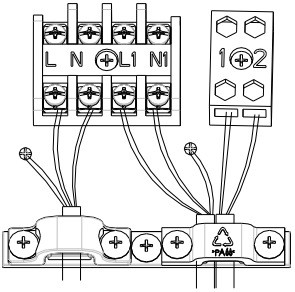

Single-phase unit：100, 125, 140.

a) Wire routing of separated power supply for single phase.

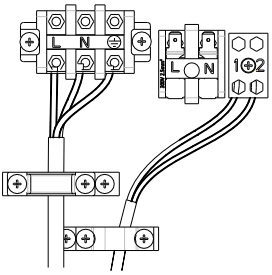

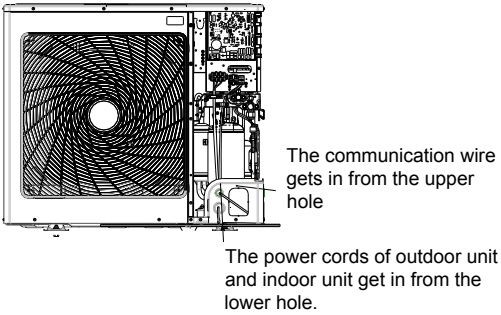

b) Wire routing of unified power supply for single phase.

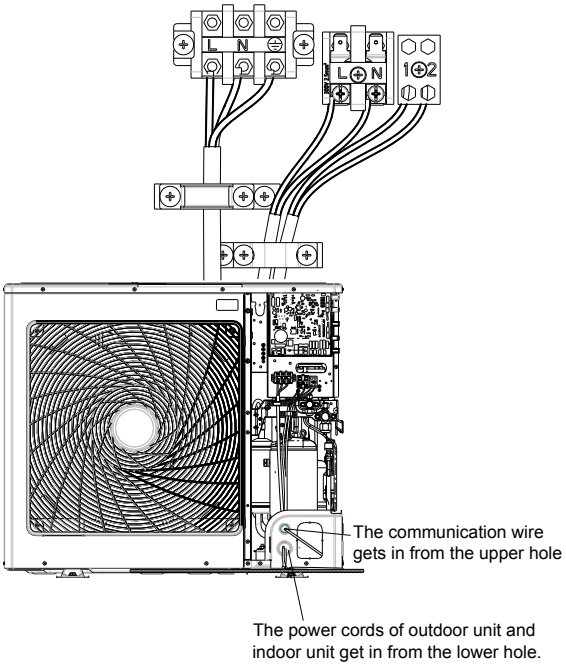

Three-phase unit: 100, 125, 140,160.

a) Wire routing of separated power supply for three phase.

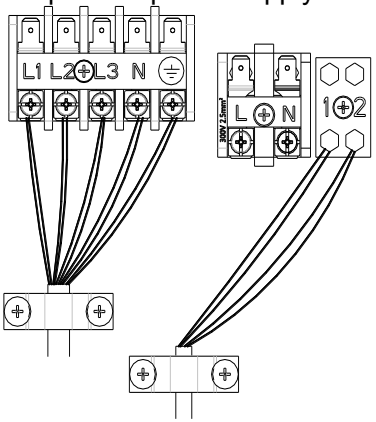

Only for 160

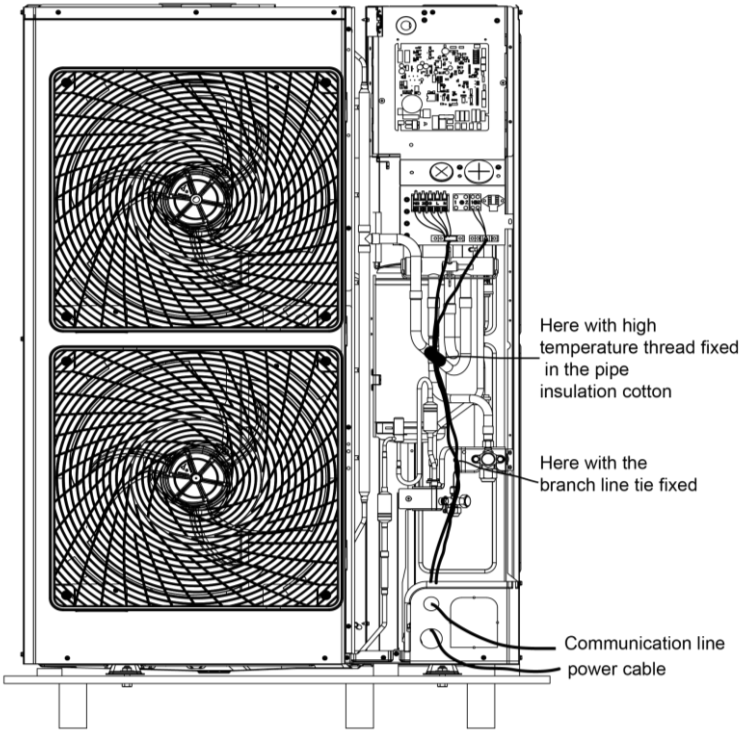

b) Wire routing of unified power supply for three-phase.

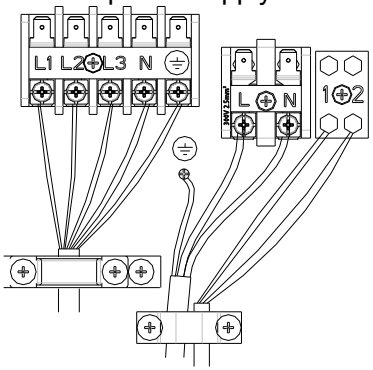

Only for 160

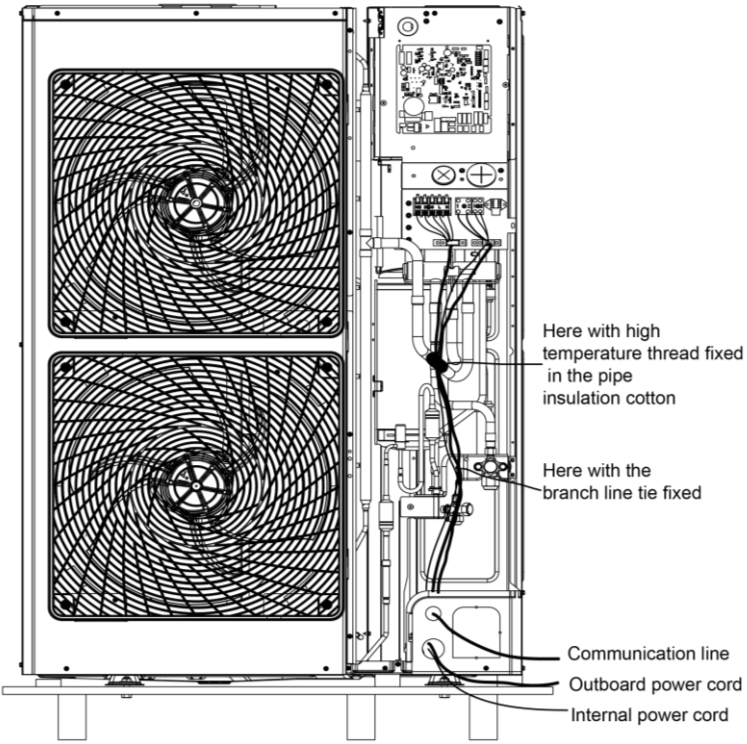

Power cord should be secured along with the right side plate and fixed to the hook with a wire clamp so as to avoid contacting the pipeline. The communication line between indoor and outdoor units should also be laid along with the right side plate but away from the power cord.

3.4 Check after Installation

Check Items after Installation

Check items	Possible events due to improper installation
Is the main body installed securely?	The unit may fall down, vibrate or produce noise.
Did you do water leakage test?	Cooling capacity may become unsatisfactory.
Is the unit well insulated from heat?	Condensate, water drops may occur.
Does water drainage go well?	Condensate, water drops may occur.
Is the voltage consistent with that stated on the nameplate?	The unit may fail or its components may get burned.
Are the wires and pipes installed correctly?	The unit may fail or its components may get burned.
Has the unit been safely grounded?	Risk of electric leakage.
Do the specifications of wires comply with the requirement?	The unit may fail or its components may get burned.
Is there any obstacle blocking the air inlet and outlet of the indoor or outdoor units?	Cooling capacity may become unsatisfactory.
Have you recorded the length of refrigerant pipe and the refrigerant charging amount?	The refrigerant charging amount can’t be controlled.

3.5 Test Running

Preparation before connecting the power.

(1) Power must not be connected if the installation work is not completed.

(2) Control circuit is correct and all the wires are firmly connected.

(3) Cut-off valves of the gas pipe and liquid pipe are open.

(4) The inside of the unit should be clean. Take irrelevant objects out if there is any.

(5) After checking, re-install the front side plate.

Operation after connecting the power.

(1) If all the above works are finished, power on the unit.

(2) If the outside temperature is more than 30℃, heating mode can’t be enabled.

(3) Make sure the indoor and outdoor units can run normally.

(4) If there's sound of liquid shock when the compressor is running, then stop the air conditioner immediately. Wait until the electric heating belt is heated enough, and then restart the air conditioner.

(5) Feel the air flow of the indoor unit to see if it is normal.

(6) Press the swing button or speed control button on remote control or wired control to see if the fan can run normally.

Notice:

①. If you use remote control to turn off the unit, compressor will continue to run for 6min.

②. If you use remote control to turn off the unit and then immediately turn the unit on again, compressor will need 3min to restart. Even if you press "ON/OFF" button on the remote control, it won't be started up right away.

③. If there's no display on the wired control, it's probably because the connection wire between the indoor unit and wired control is not connected. Please check again.

4 Operation Specification

Refer to the wired controller or remote controller manual.

5 Maintenance

5.1 Failures Not Caused by Faults of the AC

(1) If your air conditioner fails to function normally, please first check the following items before maintenance:

Problem	Cause	Corrective measure
The air conditioner can't run.	If you turn off the unit and then immediately turn it on, in order to protect the compressor and avoid system overload, compressor will delay running for 3min.	Please wait for a while.
	Wire connection is wrong.	Connect wires according to the wiring diagram.
	Fuse or circuit breaker is broken.	Replace the fuse or switch on the circuit breaker.
	Power failure.	Restart after power is resumed.
	Power plug is loose.	Re-insert the power plug.
	Remote control has low battery.	Replace the batteries.
Bad cooling or heating effect.	Air inlet and outlet of indoor or outdoor units have been blocked.	Clear the obstacles and keep the room for indoor and outdoor units well ventilated.
	Improper temperature setting	Reset a proper temperature.
	Fan speed is too low.	Reset a proper fan speed.
	Air flow direction is not right.	Change the direction of air louvers.
	Doors or windows are open.	Close them.
	Exposed under direct sunshine.	Put on curtains or louvers in front of the windows.
	Too many heat sources in the room.	Remove unnecessary heat sources.
	Filter is blocked or dirty.	Send for a professional to clean the filter.
	Air inlets or outlets of the units are blocked.	Clear away obstacles that are blocking the air inlets and outlets of indoor and outdoor units.

(2) The following situations are not operation failures.

Problem	Time of occurrence	Cause
Mist comes from the air conditioner.	During operation.	If the unit is running under high humidity, the wet air in the room will be quickly cooled down.
Mist comes from the air conditioner.	System switches to heating mode after defrosting.	Defrosting process will generate some water, which will turn to water vapor.
	The air conditioner is buzzing at the beginning of operation.	Temperature control will be buzzing when it starts working. The noise will become weak 1min later.
Dust comes from the air conditioner.	When the unit is turned on, it purrs.	When the system is just started, the refrigerant is not stable. About 30s later, the purr of the unit becomes low.
	About 20s after the unit first enables the heating mode or there is refrigerant brushing sound when defrosting under heating.	It's the sound of 4-way valve switching direction. The sound will disappear after the valve changes its direction.
	There is hissing sound when the unit is started or stopped and a slight hissing sound during and after operation.	It's the sound of gaseous refrigerant that stops flowing and the sound of drainage system.
	There is a sound of crunching during and after operation.	Because of temperature change, front panel and other components may be swelled up and cause abrasion sound.
	There is a hissing sound when the unit is turned on or suddenly stopped during operation or after defrosting.	Because refrigerant suddenly stops flowing or changes the flow direction.
	The unit starts operation after being unused for a long time.	Dust inside the indoor unit comes out together with the air.
The air conditioner generates some smell.	During operation.	The room smell or the smell of cigarette comes out through the indoor unit.

Notice: Check the above items and adopt the corresponding corrective measures. If the air conditioner continues to function poorly, please stop the air conditioner immediately and contact C&H's authorized local service center. Ask our professional service staff to check and repair the unit.

5.2 Error Code

Warning
①. If abnormal things (for example, awful smell) occur, please stop the unit immediately and disconnect power. Then contact C&H's authorized service center. If the unit continues to run in abnormal situations, it may get damaged and cause electric shock or fire hazard.
②. Do not repair the air conditioner by yourself. Improper maintenance will cause electric shock or fire hazard. Please contact C&H's authorized service center and send for professional service staff to repair.

If the display panel or wired control displays an error code, please refer to the error code meaning stated in the following table.

Number	Error code	Error
1	E1	Compressor high pressure protection
2	E2	Indoor anti-freeze protection
3	E3	Compressor low pressure protection, refrigerant lack protection and refrigerant colleting mode
4	E4	Compressor air discharge high-temperature protection
5	E6	Communication error
6	E8	Indoor fan error
7	E9	Water-full protection
8	F0	Indoor ambient temperature sensor error
9	F1	Evaporator temperature sensor error
10	F2	Condenser temperature sensor error
11	F3	Outdoor ambient temperature sensor error
12	F4	Discharge temperature sensor error
13	F5	Wired control temperature sensor error
14	C5	IDU jumper cap error
15	EE	IDU or ODU memory chip error
16	PF	Electric box sensor error

Number	Error code	Error
17	H3	Compressor overload protection
18	H4	Overload
19	H5	IPM protection
20	H6	DC fan error
21	H7	Driver out-of-step protection
22	HC	Pfc protection
23	Lc	Startup failure
24	Ld	Compressor phase-sequence protection
25	LF	Power protection
26	Lp	IDU and ODU unmatched
27	U7	4–way valve switch-over error
28	P0	Driver reset protection
29	P5	Over-current protection
30	P6	Master control and driver communication error
31	P7	Driver module sensor error
32	P8	Driver module high temperature protection
33	P9	Zero-crossing protection
34	PA	AC current protection
35	Pc	Driver current error
36	Pd	Sensor connection protection
37	PE	Temperature drift protection
38	PL	Bus low-voltage protection
39	PH	Bus high-voltage protection
40	PU	Charge loop error
41	PP	Input voltage error
42	ee	Drive memory chip error
43	C4	ODU jumper cap error
44	dJ	Phase-loss and anti-phase protection
45	oE	ODU error, for specific error please see the status of ODU indicator
46	EL	Emergency Stop(Fire alarm)

Notice: When the unit is connected with the wired controller, the error code will be simultaneously shown on it.

5.3 Unit Maintenance

Warning	
①.	Only professionals are allowed to carry on daily maintenance.
②.	Before contacting any wire, make sure power is cut off.
③.	Do not let any inflammable objects near the unit.
④.	Do not use organic solvent to clean the air conditioner.
⑤.	If you need to replace a component, please ask a professional to repair with a component supplied by the original manufacturer so as to ensure the unit's quality.
⑥.	Improper operation may get the unit broken, hit by electric shock or cause fire.
⑦.	Do not make the air conditioner wet or electric shock may be lead; Ensure that the air conditioner will not be cleaned by water rinsing under any circumstance.

Notice	
①.	Before cleaning, please make sure the unit is stopped. Cut the circuit breaker and remove the power socket, otherwise, electric shock may occur.
②.	Do not wash the air conditioner with water, otherwise fire hazard or electric shock may occur.
③.	When cleaning the filter, please be careful of your steps. If you need to work high above the ground, please be extremely careful.

5.3.1 Clean Air Filter

If the air conditioner is used at a dusty place, clean the air filter regularly. (Once every half a year)

How to clean the air filter	
1) Open the air intake grill. Push the clasps outward and then open the air intake grill.	---
2) Remove the air filter. Pull the handle at the back of air intake grill. Lift up the filter and then detach it. Then remove the 3 cleaners that are fixed on the filter.	
3) Cleaning Use vacuum cleaner to remove dust or rinse the filter. If the filter is very dirty (greasy), use warm water (below 45℃) with neutral detergent to clean it. Then dry the filter at a cool place. Notice: do not use hot water (above 45℃) to clean, otherwise the filter may be discolored or out of shape. Do not dry it with fire, otherwise the filter will catch fire or become out of shape.	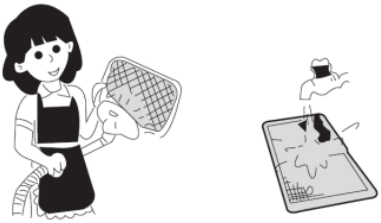
4) Fix the 3 cleaners on the filter and then re-install the filter by fitting it into the protruding parts on top of the air intake grill. Pull the handle at the back of the air intake grill to secure the filter.	---
5) Close the air intake grill. Push the clasps outward and then match the air intake grill with the main body. Loose the clasps and then close it.	---

5.3.2 Clean Air Intake Grill

How to clean the air intake grill	
1) Open the air intake grill.	Same with step 1 in “Clean Air Filter”.
2) Take out the air filter.	Same with step 2 in “Clean Air Filter”.
3) Take out the air intake grill. (Open the air intake grill at an angle of 45 degrees, and then lift it up).	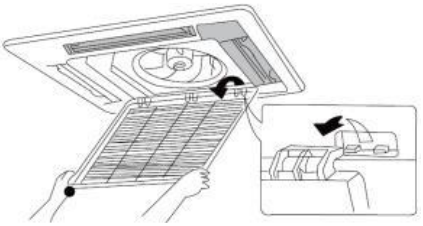
4) Cleaning Use soft brush, water, neutral detergent to clean. After cleaning, shake off the water or let it dry. Notice: do not use hot water (above 45℃) to clean, otherwise the filter may be discolored or out of shape.	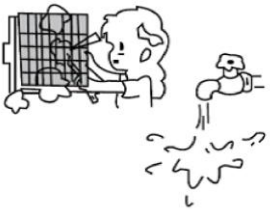
5) Install the air intake grill.	Refer to step 3.
6) Install the air filter.	Same with step 4 in “Clean Air Filter”.
7) Close the air intake grill.	Refer to step 1.

5.3.3 Heat Exchanger of Outdoor Unit

Conduct cleaning for the heat exchanger of outdoor unit periodically, clean it once at least in every two months. Clean the dust and sundries on the surface of the heat exchanger with dust collector and nylon brush, if there’s compressed air source; use the compressed air to blow the dust on the surface of the heat exchanger. Don’t use tap water for cleaning.

5.3.4 Drainage Pipe

Periodically check if the drainage pipe is blocked to smooth the condensate water.

5.3.5 Notices at the Beginning of the Using Season

(1) Check if the air inlet/outlet of indoor/outdoor unit is blocked.

(2) Check if the ground connection is reliable.

(3) Check if the battery of remote controller is replaced.

(4) Check if the air filter screen is properly installed.

(5) If starting up again after long-term shut down, preset the power switch of air conditioner to “ON” status before 8h of operation, to preheat the crankcase of outdoor compressor.

(6) Check if the installation of outdoor unit is firm, if not, please contact with C&H appointed maintenance center.

5.3.6 Maintenance at the End of the Using Season

(1) Cut off the main power of air conditioner.

(2) Clean the filter screen, indoor and outdoor unit.

(3) Clean the dust and sundries in indoor and outdoor unit.

(4) If the outdoor unit is rusty, coat the rusty location with paint to prevent it from expanding.

5.3.7 Components Replacement

Components are available in C&H agency or C&H distributors nearby.

5.4 Notice on Maintenance

5.4.1 Information on Servicing

The manual shall contain specific information for service personnel who shall be instructed to undertake the following when servicing an appliance that employs a flammable refrigerant.

5.4.1.1 Checks to the Area

Prior to beginning work on systems containing flammable refrigerants, safety checks are necessary to ensure that the risk of ignition is minimized. For repair to the refrigerating system, the following precautions shall be complied with prior to conducting work on the system.

5.4.1.2 Work Procedure

Work shall be undertaken under a controlled procedure so as to minimize the risk of a flammable gas or vapour being present while the work is being performed.

5.4.1.3 General Work Area

All maintenance staff and others working in the local area shall be instructed on the nature of work being carried out. Work in confined spaces shall be avoided. The area around the workspace shall be sectioned off. Ensure that the conditions within the area have been made safe by control of flammable material.

5.4.1.4 Checking for Presence of Refrigerant

The area shall be checked with an appropriate refrigerant detector prior to and during work, to ensure the technician is aware of potentially flammable atmospheres. Ensure that the leak detection equipment being used is suitable for use with flammable refrigerants, i.e. non-sparking, adequately sealed or intrinsically safe.

5.4.1.5 Presence of Fire Extinguisher

If any hot work is to be conducted on the refrigeration equipment or any associated parts, appropriate fire extinguishing equipment shall be available to hand. Have a dry powder or CO2 fire extinguisher adjacent to the charging area.

5.4.1.6 No Ignition Sources

No person carrying out work in relation to a refrigeration system which involves exposing any pipe work that contains or has contained flammable refrigerant shall use any sources of ignition in such a manner that it may lead to the risk of fire or explosion. All possible ignition sources, including cigarette smoking, should be kept sufficiently far away from the site of installation, repairing, removing and disposal, during which flammable refrigerant can possibly be released to the surrounding space. Prior to work taking place, the area around the equipment is to be surveyed to make sure that there are no flammable hazards or ignition risks. “No Smoking” signs shall be displayed.

5.4.1.7 Ventilated area

Ensure that the area is in the open or that it is adequately ventilated before breaking into the system or conducting any hot work. A degree of ventilation shall continue during the period that the work is carried out. The ventilation should safely disperse any released refrigerant and preferably expel it externally into the atmosphere.

5.4.1.8 Checks to the Refrigeration Equipment

Where electrical components are being changed, they shall be fit for the purpose and to the correct specification. At all times the manufacturer's maintenance and service guidelines shall be followed. If in doubt consult the manufacturer's technical department for assistance.

The following checks shall be applied to installations using flammable refrigerants:

(1) The charge size is in accordance with the room size within which the refrigerant containing parts are installed.

(2) The ventilation machinery and outlets are operating adequately and are not obstructed.

(3) If an indirect refrigerating circuit is being used, the secondary circuit shall be checked for the presence of refrigerant.

(4) Marking to the equipment continues to be visible and legible. Markings and signs that are illegible shall be corrected.

(5) Refrigeration pipe or components are installed in a position where they are unlikely to be exposed to any substance which may corrode refrigerant containing components, unless the components are constructed of materials which are inherently resistant to being corroded or are suitably protected against being so corroded.

5.4.1.9 Checks to Electrical Devices

Repair and maintenance to electrical components shall include initial safety checks and component inspection procedures. If a fault exists that could compromise safety, then no electrical supply shall be connected to the circuit until it is satisfactorily dealt with. If the fault cannot be corrected immediately but it is necessary to continue operation, an adequate temporary solution shall be

used. This shall be reported to the owner of the equipment so all parties are advised.

Initial safety checks shall include:

(1) That capacitors are discharged: this shall be done in a safe manner to avoid possibility of sparking.

(2) That no live electrical components and wiring are exposed while charging, recovering or purging the system.

(3) That there is continuity of earth bonding.

5.4.2 Repairs to Sealed Components

5.4.2.1 During repairs to sealed components, all electrical supplies shall be disconnected

From the equipment being worked upon prior to any removal of sealed covers, etc. If it is absolutely necessary to have an electrical supply to equipment during servicing, then a permanently operating form of leak detection shall be located at the most critical point to warn of a potentially hazardous situation.

5.4.2.2 Particular attention shall be paid to the following to ensure that by working on

Electrical components, the casing is not altered in such a way that the level of protection is affected. This shall include damage to cables, excessive number of connections, terminals notmade to original specification, damage to seals, incorrect fitting of glands, etc.

Ensure that apparatus is mounted securely.。

Ensure that seals or sealing materials have not degraded such that they no longer serve the purpose of preventing the ingress of flammable atmospheres. Replacement parts shall be in accordance with the manufacturer’s specifications.

Notice： The use of silicon sealant may inhibit the effectiveness of some types of leak detection equipment. Intrinsically safe components do not have to be isolated prior to working on them.

5.4.3 Repair to Intrinsically Safe Components

Do not apply any permanent inductive or capacitance loads to the circuit without ensuring that this will not exceed the permissible voltage and current permitted for the equipment in use.

Intrinsically safe components are the only types that can be worked on while live in the presence of a flammable atmosphere. The test apparatus shall be at the correct rating.

Replace components only with parts specified by the manufacturer. Other parts may result in the ignition of refrigerant in the atmosphere from a leak.

5.4.4 Cabling

Check that cabling will not be subject to wear, corrosion, excessive pressure, vibration, sharp edges or any other adverse environmental effects. The check shall also take into account the effects of ageing or continual vibration from sources such as compressors or fans.

5.4.5 Detection of Flammable Refrigerants

Under no circumstances shall potential sources of ignition be used in the searching for or detection of refrigerant leaks. A halide torch (or any other detector using a naked flame) shall not be used.

5.4.6 Removal and Evacuation

When breaking into the refrigerant circuit to make repairs – or for any other purpose –conventional procedures shall be used. However, it is important that best practice is followed since flammability is a consideration. The following procedure shall be adhered to：

(1) Remove refrigerant.

(2) Purge the circuit with inert gas.

(3) Evacuate.

(4) Purge again with inert gas.

(5) Open the circuit by cutting or brazing.

The refrigerant charge shall be recovered into the correct recovery cylinders. The system shall be “flushed” with OFN to render the unit safe. This process may need to be repeated several times. Compressed air or oxygen shall not be used for this task.

Flushing shall be achieved by breaking the vacuum in the system with OFN

and continuing to fill until the working pressure is achieved, then venting to atmosphere, and finally pulling down to a vacuum. This process shall be repeated until no refrigerant is within the system. When the final OFN charge is used, the system shall be vented down to atmospheric pressure to enable work to take place. This operation is absolutely vital if brazing operations on the pipework are to take place.

Ensure that the outlet for the vacuum pump is not close to any ignition sources and there is ventilation available.

5.4.7 Charging Procedures

In addition to conventional charging procedures, the following requirements shall be followed.

(1) Ensure that contamination of different refrigerants does not occur when using charging equipment. Hoses or lines shall be as short as possible to minimize the amount of refrigerant contained in them.；

(2) Cylinders shall be kept upright.；

(3) Ensure that the refrigeration system is earthed prior to charging the system with refrigerant；

(4) Label the system when charging is complete (if not already).

(5) Extreme care shall be taken not to overfill the refrigeration system.

(6) Prior to recharging the system it shall be pressure tested with OFN. The system shall be leak tested on completion of charging but prior to commissioning. A follow up leak test shall be carried out prior to leaving the site.

5.4.8 Decommissioning

Before carrying out this procedure, it is essential that the technician is completely familiar with the equipment and all its detail. It is recommended good practice that all refrigerants are recovered safely. Prior to the task being carried out, an oil and refrigerant sample shall be taken in case analysis is required prior to re-use of reclaimed refrigerant. It is essential that electrical power is available before the task is commenced:

(1) Become familiar with the equipment and its operation；

(2) Isolate system electrically.：

(3) Before attempting the procedure ensure that:

1) Mechanical handling equipment is available, if required, for handling refrigerant cylinders;
2) All personal protective equipment is available and being used correctly
3) The recovery process is supervised at all times by a competent person
4) Recovery equipment and cylinders conform to the appropriate standards.

(4) Pump down refrigerant system, if possible.

(5) If a vacuum is not possible, make a manifold so that refrigerant can be removed from various parts of the system.

(6) Make sure that cylinder is situated on the scales before recovery takes place.

(7) Start the recovery machine and operate in accordance with manufacturer's instructions.

(8) Do not overfill cylinders. (No more than 80 % volume liquid charge).

(9) Do not exceed the maximum working pressure of the cylinder, even temporarily.

(10) When the cylinders have been filled correctly and the process completed, make sure that the cylinders and the equipment are removed from site promptly and all isolation valves on the equipment are closed off.

(11) Recovered refrigerant shall not be charged into another refrigeration system unless it has been cleaned and checked.

5.4.9 Labelling

Equipment shall be labelled stating that it has been de-commissioned and emptied of refrigerant. The label shall be dated and signed. Ensure that there are labels on the equipment stating the equipment contains flammable refrigerant.

5.4.10 Recovery

When removing refrigerant from a system, either for servicing or decommissioning, it is recommended good practice that all refrigerants are removed safely.

When transferring refrigerant into cylinders, ensure that only appropriate refrigerant recovery cylinders are employed. Ensure that the correct number of cylinders for holding the total system charge are available. All cylinders to be used are designated for the recovered refrigerant and labelled for that refrigerant (i.e. special cylinders for the recovery of refrigerant).

Cylinders shall be complete with pressure relief valve and associated shut-off valves in good working order. Empty recovery cylinders are evacuated and, if possible, cooled before recovery occurs.

The recovery equipment shall be in good working order with a set of instructions concerning the equipment that is at hand and shall be suitable for the recovery of flammable refrigerants. In addition, a set of calibrated weighing scales shall be available and in good working order. Hoses shall be complete with leak-free disconnect couplings and in good condition. Before using the recovery machine, check that it is in satisfactory working order, has been properly maintained and that any associated electrical components are sealed to prevent ignition in the event of a refrigerant release. Consult manufacturer if in doubt.

The recovered refrigerant shall be returned to the refrigerant supplier in the correct recovery cylinder, and the relevant Waste Transfer Notice arranged. Do not mix refrigerants in recovery units and especially not in cylinders.

If compressors or compressor oils are to be removed, ensure that they have been evacuated to an acceptable level to make certain that flammable refrigerant does not remain within the lubricant. The evacuation process shall be carried out prior to returning the compressor to the suppliers. Only electric heating to the compressor body shall be employed to accelerate this process. When oil is drained from a system, it shall be carried out safely.

5.5 After-Sales Services

Any quality or other issues encountered in the purchased air conditioner, please contact the local C&H after-sales service department.

66129929300